DISEÑOS DE RECINTOS

2008

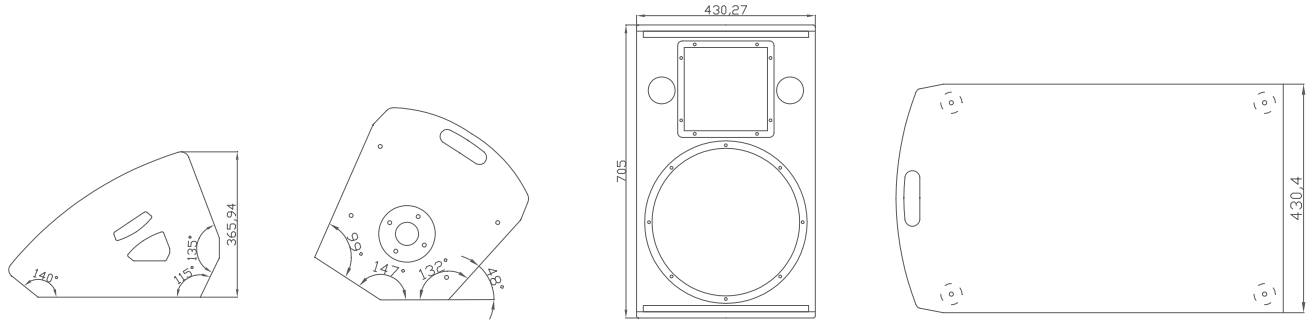

beyma

beyond making sound

Beyma presenta una nueva familia de diseños de recintos acústicos creada para obtener la mejor respuesta de nuestros altavoces siguiendo las últimas tendencias del mercado.

Los nuevos diseños cubren las necesidades de un amplio número de aplicaciones, desde las cajas de subgrave de alta potencia hasta los monitores de escenario, ofreciendo un amplio rango de diseños que presentan un rendimiento óptimo, tamaños compactos y diseños atractivos.

La selección de altavoces Beyma para este catálogo incluye algunos de nuestros últimos y más innovadores productos, como los subgraves de alta potencia P1200Nd o el tweeter de diafragma plegado TPL-150, que proporciona un excepcional sonido de alta frecuencia a las aplicaciones de audio profesional. Tanto el diseño de filtros pasivos específicos para algunos modelos así como la diferente combinación de componentes han sido cuidadosamente estudiados con el objetivo de disponer de un sistema equilibrado así como la mejor respuesta sonora.

En este libro se pueden encontrar tres tipos de recinto:

- SISTEMAS FULL RANGE

  Sistemas de PA versátiles diseñados en configuración dos vías. Estas cajas pueden ser usadas como sistemas PA de tamaño pequeño o mediano así como monitores de escenario. También están preparadas para montarse en un soporte o trípode y para montarle un sistema de volado.

  Para poder permitir estas prestaciones, las bocinas utilizadas en todos los modelos permiten ser rotadas de manera que las cajas puedan ser usadas tanto en posición vertical como en posición horizontal.

  Se presenta una amplia variedad de combinaciones de altavoces Beyma con el objetivo de ofrecer diferentes opciones manteniendo siempre la sinergia entre los diferentes componentes y buscando el mejor resultado final.

- CAJAS DE SUBGRAVES

  Diseños de alto rendimiento para subgraves de alta potencia. Estos sistemas ofrecerán una respuesta óptima en la zona más baja de frecuencia así como un SPL extendido usando el mínimo volumen. Un tamaño y una respuesta impactantes gracias a los subwoofers P1200Nd, P1000Nd y la familia de alta eficiencia P80Nd.

- MONITORES DE ESCENARIO

  Diseños compactos para una aplicación donde el espacio, en ocasiones, es muy limitado. El diseño se ha realizado para mantener baja la altura del monitor, de manera que no represente un obstáculo en la visual de las primeras filas. Perfiles atractivos y funcionales y la mejor respuesta sónica de nuestros altavoces coaxiales.

Todos los diseños incluyen información detallada de los recintos, los componentes empleados, los esquemas de filtros pasivos (en función del modelo) y nuestras recomendaciones en los ajustes para obtener la mejor respuesta sonora de cada sistema (información de filtrado activo y presets EQ).

Muchas gracias por la confianza en nuestros productos.

Acústica Beyma s.l.
Mayo 2008

Indice

Sistemas Full Range Página

FR12A/1
2 way 12” PA system - 350 W AES - 12MW/Nd, TPL-150/H 5

FR12A/2
2 way 12” PA system - 400 W AES - 12G40, TPL-150/H 10

FR12B/1
2 way 12” PA system - 350 W AES - 12MW/Nd, CP755Nd, TD-385 16

FR12B/2
2 way 12” PA system - 400 W AES - 12G40, CP755Nd, TD-385 21

FR15A/1
2 way 15” PA system - 1000 W AES - 15P1000/Nd, TPL-150/H 26

FR15A/2
2 way 15” PA system - 800 W AES - 15P80/Nd, TPL-150/H 32

FR15B/1
2 way 15” PA system - 1000 W AES - 15P1000/Nd, CP755/Ti, TD-385 38

FR15B/2
2 way 15” PA system - 800 W AES - 15P80/Nd, CP755/Ti, TD-385 44

FR15B/3
2 way 15” PA system - 400 W AES – 15MW/Nd, SMC65/Nd, TD-385 50

FR15B/4
2 way 15” PA system - 700 W AES – 15G40, SMC65/Nd, TD-385 55

Cajas de Subgraves

SB15/1
15” Bass reinforcement - 1200 W AES - 15P1200/Nd 60

SB15/2
15” Bass reinforcement - 1000 W AES - 15P1000/Nd 64

SB15/3
15” Bass reinforcement - 800 W AES - 15P80/Nd 68

SB18/1
18” Bass reinforcement - 1200 W AES - 18P1200/Nd 72

SB18/2
18” Bass reinforcement - 1000 W AES - 18P1000/Nd 76

SB18/3
18” Bass reinforcement - 800 W AES - 18P80/Nd 80

Monitores de Escenario

SM15/1
15” Coaxial Monitor - 350 W AES – 15XA38Nd 84

SM15/2
15” Coaxial Monitor - 300 W AES – 15KX 88

Technical Specifications

Acoustic cabinet:	FR12A
Description:	2 Way System. 12” and High Frequency unit
Power AES:	350 W.
Power Program:	700 W.
Sensitivity 2,83v @ 1m:	97 dB.
Max. SPL continuous:	122 dB.
Max. SPL peak:	128 dB.
Frequency response:	43 - 25.000Hz.
Coverage (H x V):	90º x 40º
Bass Loudspeakers:	12MW/ND
Compression Driver:	TPL150
Constant Directivity Horn:	TD TPL
Crossover:	FP12A/1
Hardware:	External

Base

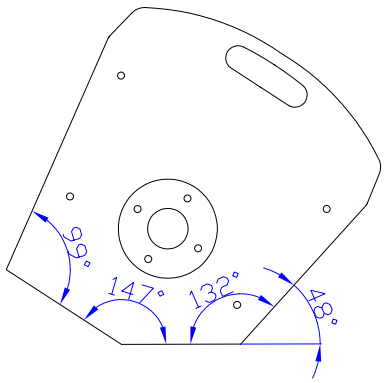

Front

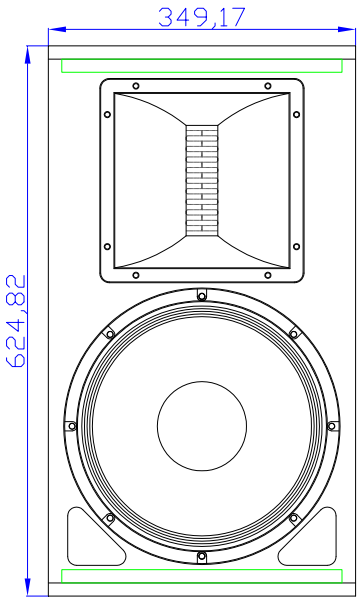

Lateral

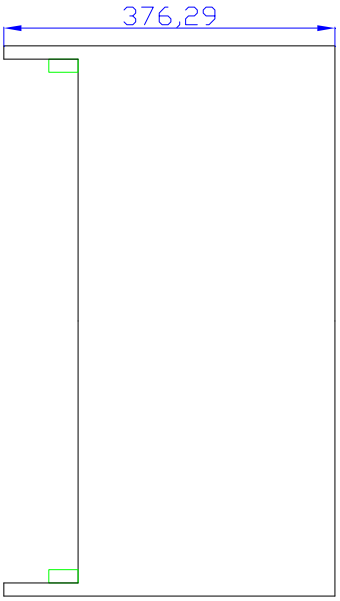

Rear

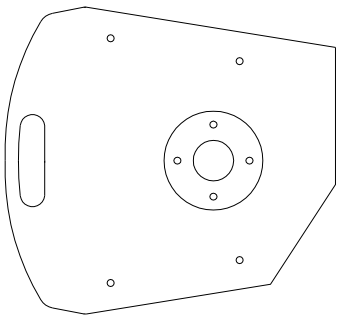

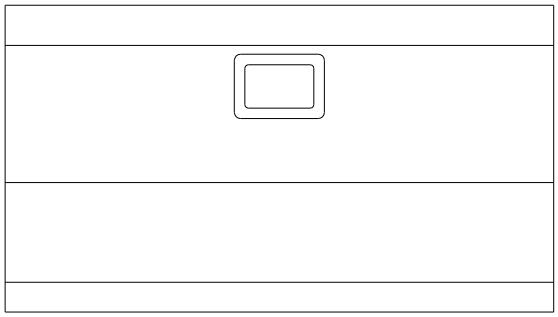

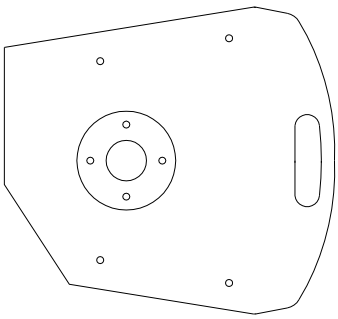

Base

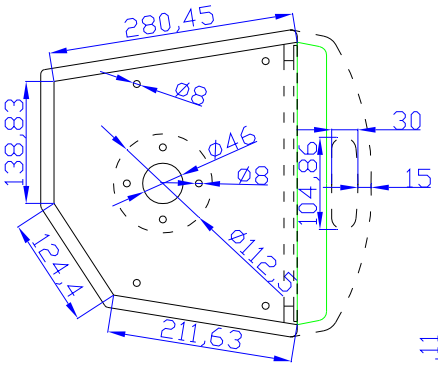

Section

Front

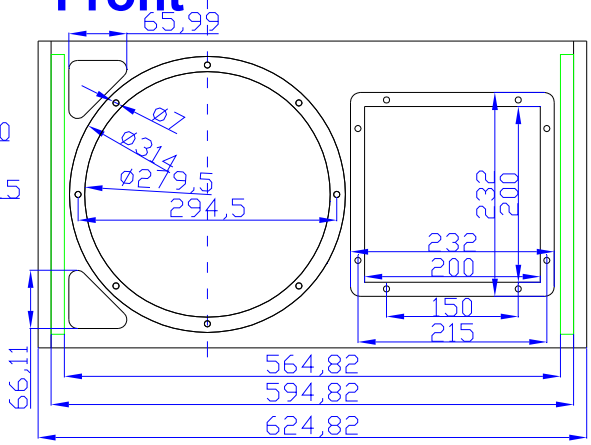

Cenital

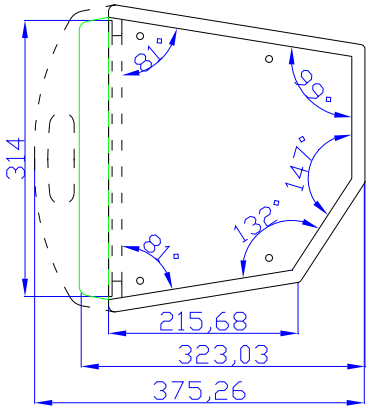

Front

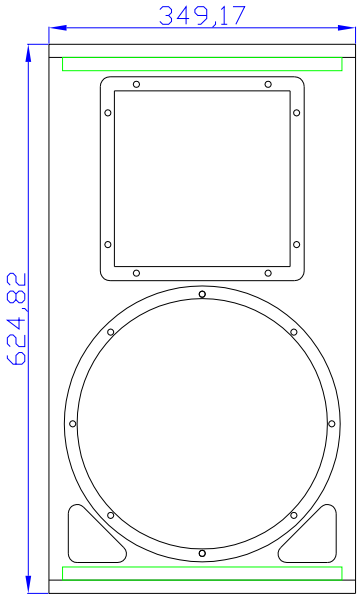

Lateral

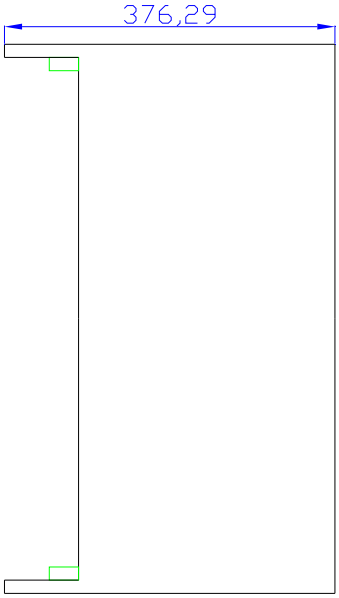

Base

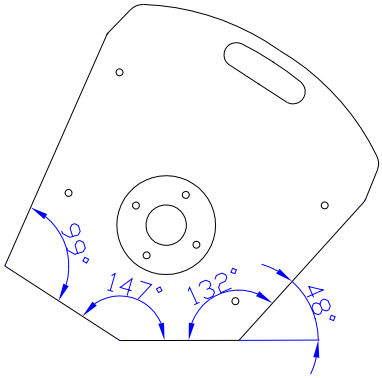

12MWNd

KEY FEATURES

- Good power handling (350 W AES)
- Sensitivity: 97 dB @ 2.83V
- Extended frequency response (35-5000 Hz)
- Neodymium magnets
- Aluminium customized basket

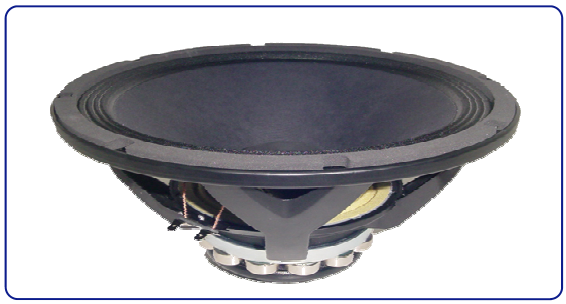

TECHNICAL SPECIFICATIONS

• Nominal diameter	300 mm. 12 in.
• Rated impedance	8 ohms
• Minimum impedance	7 ohms
• Power capacity*	350 w AES
• Program power	700 w
• Sensitivity	97 dB 2.83v @ 1m @ 2π
• Frequency range	35 - 5000 Hz
• Voice coil diameter	62.4 mm. 2.5 in.
• Magnetic assembly weight	2.54 kg. 5.59 lb.
• BL factor	16.9 N / A
• Voice coil length	19.5 mm
• Air gap height	10 mm
• X damage (peak to peak)	30 mm

DIMENSION DRAWINGS

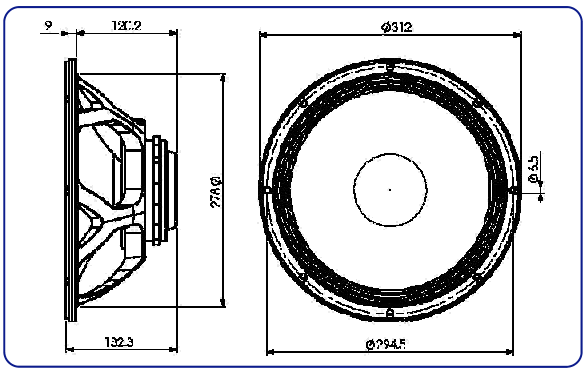

TPL-150

KEY FEATURES

- Superior sound reproduction quality
- Extended frequency response (1 - 23 kHz)
- High sensitivity (99 dB)
- Extremely linear frequency response
- Low distortion
- Designed for the high frequencies reproduction

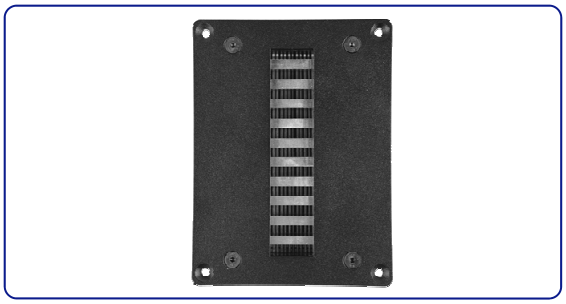

TECHNICAL SPECIFICATIONS

• Rated impedance	8 ohms
• D.C. Resistance	5.9 ohms
• Power capacity*	80 w AES above 1 kHz
• Program power	160 w above 1 kHz
• Sensitivity**	99 dB 1w @ 1m
• Frequency range	1- 23000 Hz
• Voice coil diameter	100 mm. 4 in.
• Recommended Crossover	1 kHz or higher (12 dB/oct. min.)
• Net weight	2.18 kg. 4.8 lb.

Notes:
*The power capacity is determined according to AES2-1984 (r2003) standard.
Program power is defined as the transducer's ability to handle normal music program material.
**Sensitivity was measured at 1 m distance, on axis, with 1 w input, averaged in the range 2.5 - 20 kHz.

DIMENSION DRAWINGS

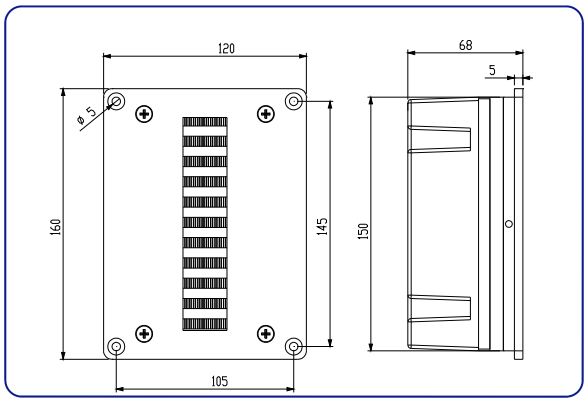

TD-TPL

KEY FEATURES

- Designed to be used with TPL-150 tweeter
- Coverage angles of 80º in the horizontal plane and 30º in the vertical plane
- Precise directivity control in the pass band
- Cast aluminium construction

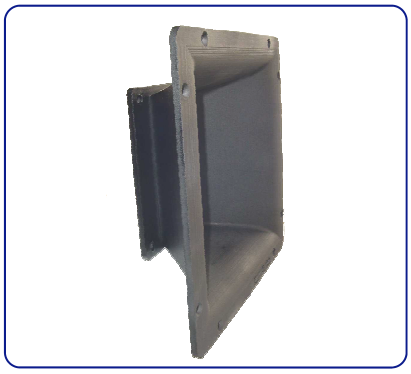

TECHNICAL SPECIFICATIONS

• Throat dimmensions (WxH)	12 x 208 mm. 0.47 x 8.19 in.
• Horizontal beamwidth	80º (+9º, -20º) (-6 dB, 1.2 - 16 kHz)
• Vertical beamwidth	30º (+27º , -21º) (-6 dB, 2 - 16 kHz)
• Directivity factor (Q)	27 (average 1.2 - 16 kHz)
• Directivity index (DI)	13 dB (+6 dB, -4.5 dB)
• Cutoff frequency	800 Hz
• Dimensions (WxHxD)	230x230x85 mm. 9.05x9.05x3.35 in.
• Cutout dimensions (WxH)	195x195 mm. 7.68x7.68 in.
• Net weight	1.5 kg. 3.3 lb.
• Construction	Cast aluminium. Connection of driver by four screws on a 5 mm. diameter bolt circle.

DIMENSION DRAWINGS

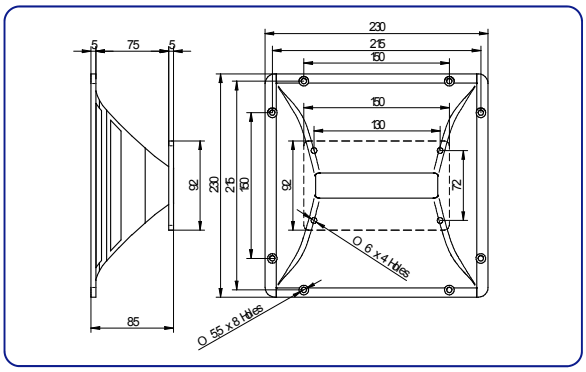

FR12A/1 Presets

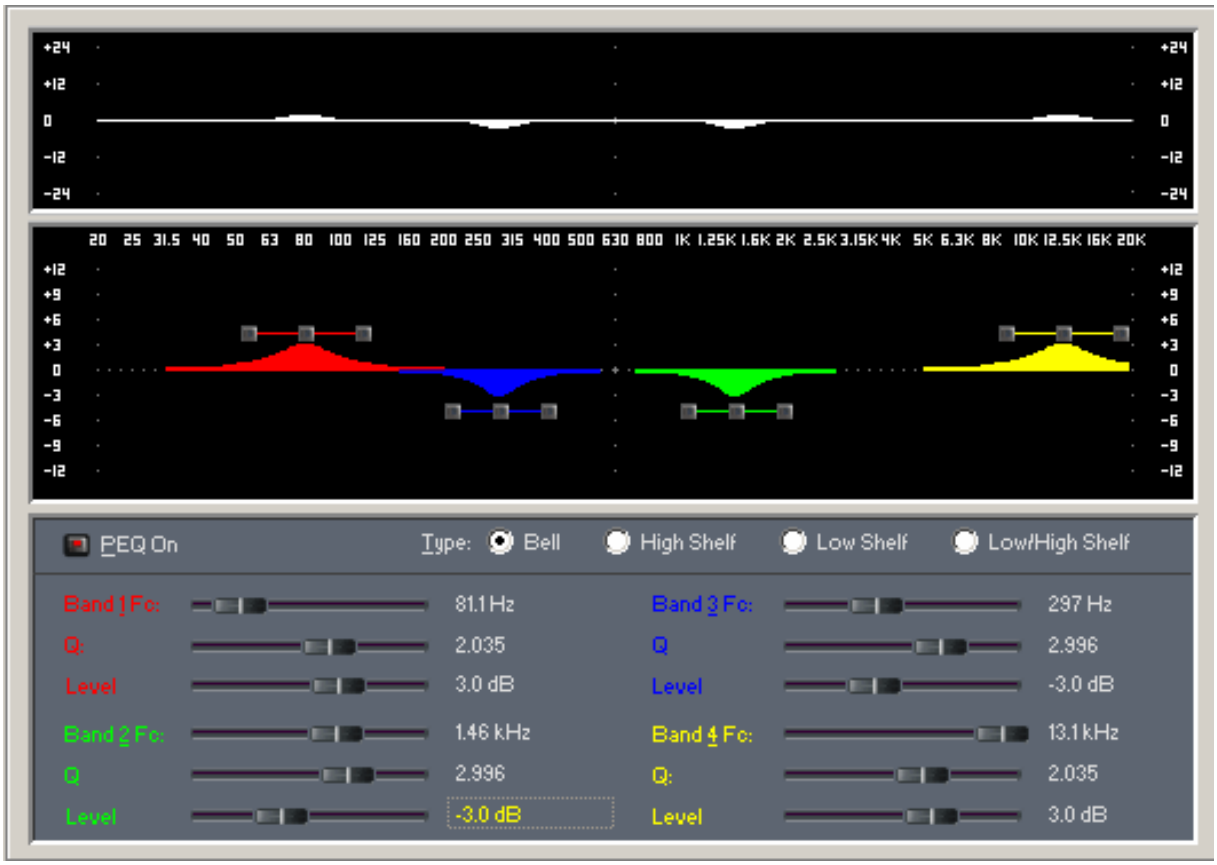

FR12A/1 Crossover

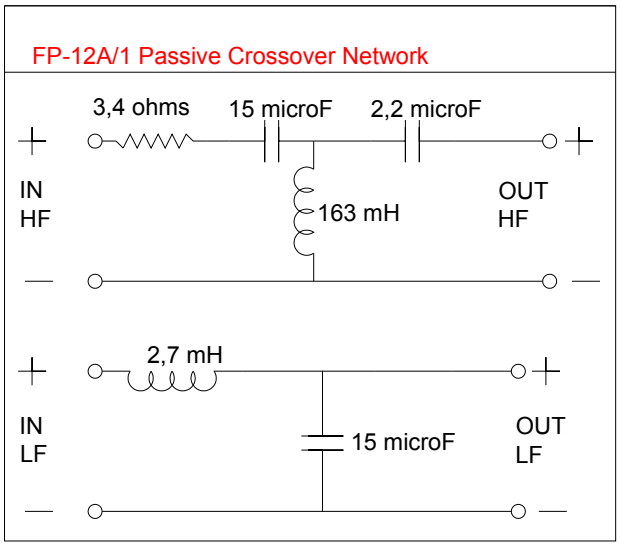

Technical Specifications

Acoustic cabinet:	FR12A
Description:	2 Way System. 12” and High Frequency unit
Power AES:	400 W.
Power Program:	800 W.
Sensitivity 2,83v @ 1m:	97 dB.
Max. SPL continuous:	123 dB.
Max. SPL peak:	129 dB.
Frequency response:	45 - 25.000Hz.
Coverage (H x V):	90º x 40º
Bass Loudspeakers:	12G40
Compression Driver:	TPL150
Constant Directivity Horn:	TD TPL
Crossover:	External
Hardware:	External

Front

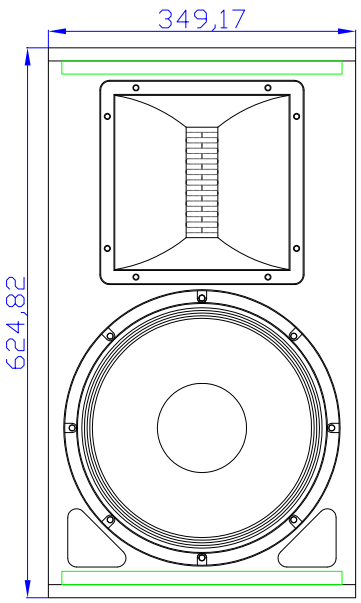

Lateral

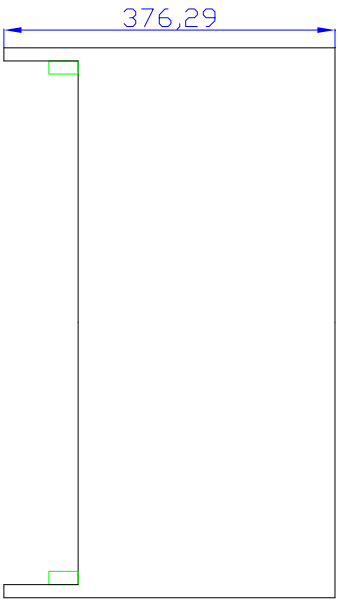

Base

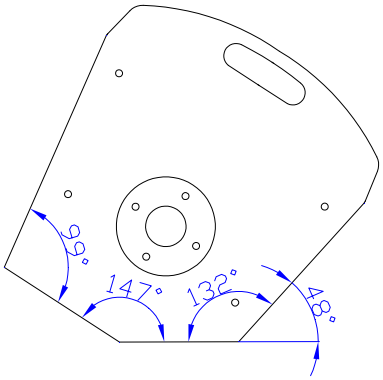

Rear

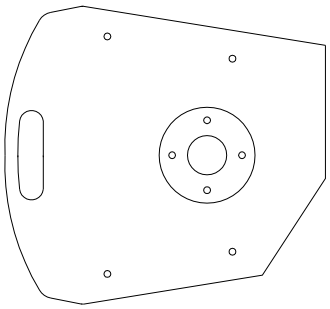

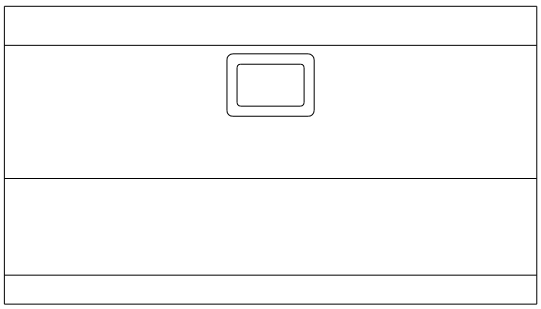

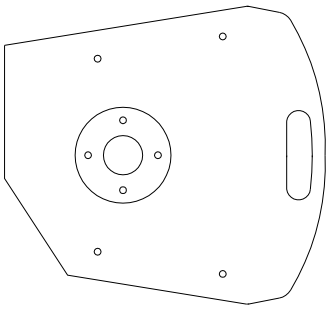

Base

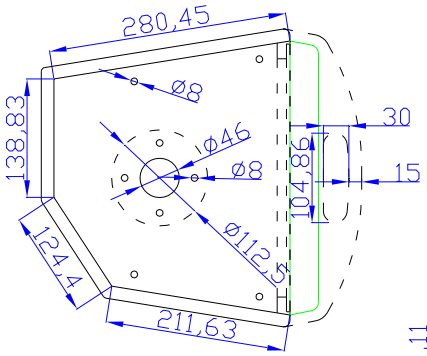

Section

Front

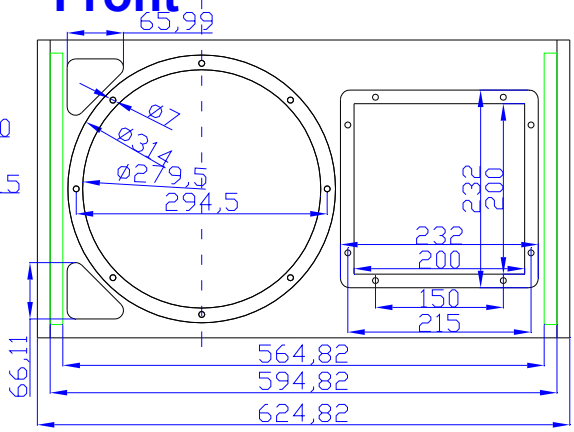

Cenital

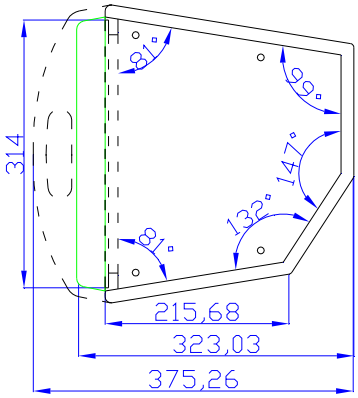

Front

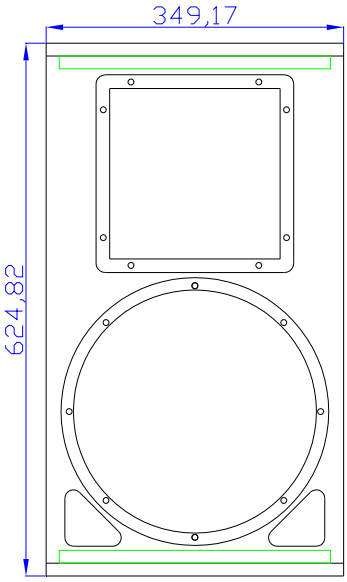

Lateral

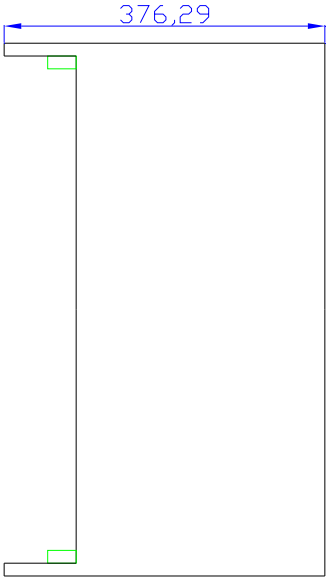

Base

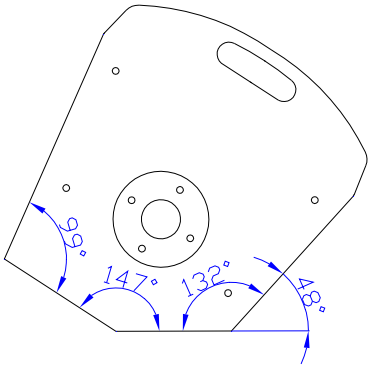

12G40

KEY FEATURES

- High power handling (500 W AES)
- 3” edgewound copper voice-coil with polyimide fiber glass former
- Optimum winding length for increased linear excursion
- Designed for woofer applications

TECHNICAL SPECIFICATIONS

• Nominal diameter	300 mm. 12 in.
• Rated impedance	8 ohms
• Minimum impedance	6.7 ohms
• Power capacity*	500 w AES
• Program power	1000 w
• Sensitivity	97 dB 2.83v @ 1m @ 2π
• Frequency range	35 - 4000 Hz
• Voice coil diameter	77 mm. 3 in.
• Magnetic assembly weight	6.3 kg. 13.9 lb.
• BL factor	18.4 N / A
• Voice coil length	20 mm
• Air gap height	8 mm
• X damage (peak to peak)	28 mm

Notes:
*The power capacity is determined according to AES2-1984 (r2003) standard.
Program power is defined as the transducer's ability to handle normal music program material.

DIMENSION DRAWINGS

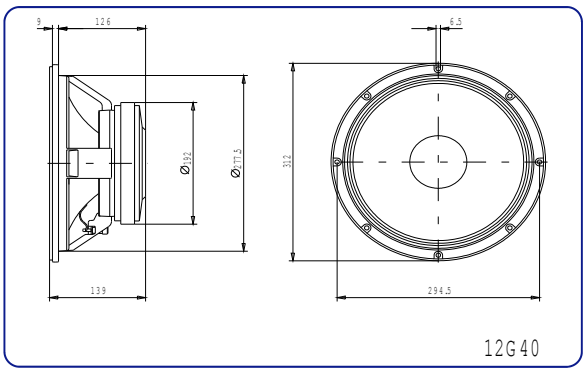

TPL-150

KEY FEATURES

- Superior sound reproduction quality
- Extended frequency response (1 - 23 kHz)
- High sensitivity (99 dB)
- Extremely linear frequency response
- Low distortion
- Designed for the high frequencies reproduction

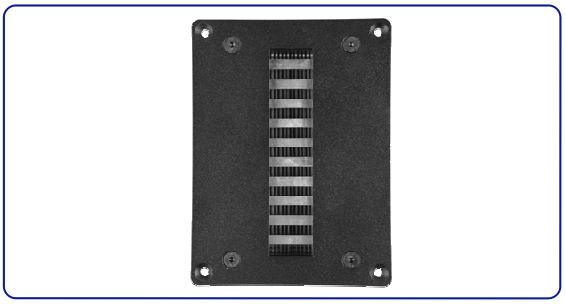

TECHNICAL SPECIFICATIONS

• Rated impedance	8 ohms
• D.C. Resistance	5.9 ohms
• Power capacity*	80 w AES above 1 kHz
• Program power	160 w above 1 kHz
• Sensitivity**	99 dB 1w @ 1m
• Frequency range	1- 23000 Hz
• Voice coil diameter	100 mm. 4 in.
• Recommended Crossover	1 kHz or higher (12 dB/oct. min.)
• Net weight	2.18 kg. 4.8 lb.

Notes:
*The power capacity is determined according to AES2-1984 (r2003) standard.
Program power is defined as the transducer's ability to handle normal music program material.
**Sensitivity was measured at 1 m distance, on axis, with 1 w input, averaged in the range 2.5 - 20 kHz.

DIMENSION DRAWINGS

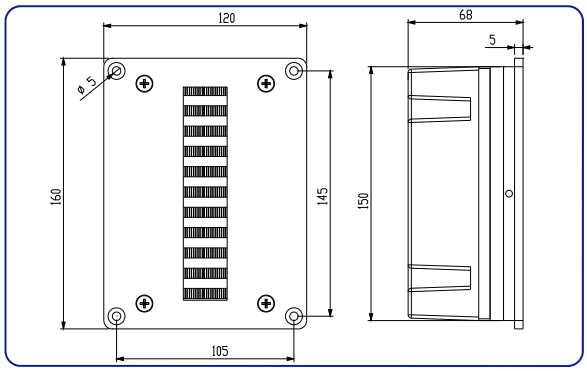

TD-TPL

KEY FEATURES

- Designed to be used with TPL-150 tweeter
- Coverage angles of 80º in the horizontal plane and 30º in the vertical plane
- Precise directivity control in the pass band
- Cast aluminium construction

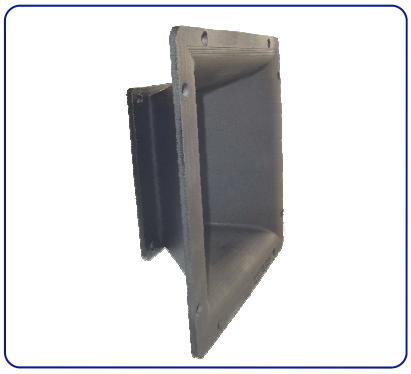

TECHNICAL SPECIFICATIONS

• Throat dimmensions (WxH)	12 x 208 mm. 0.47 x 8.19 in.
• Horizontal beamwidth	80º (+9º, -20º) (-6 dB, 1.2 - 16 kHz)
• Vertical beamwidth	30º (+27º , -21º) (-6 dB, 2 - 16 kHz)
• Directivity factor (Q)	27 (average 1.2 - 16 kHz)
• Directivity index (DI)	13 dB (+6 dB, -4.5 dB)
• Cutoff frequency	800 Hz
• Dimensions (WxHxD)	230x230x85 mm. 9.05x9.05x3.35 in.
• Cutout dimensions (WxH)	195x195 mm. 7.68x7.68 in.
• Net weight	1.5 kg. 3.3 lb.
• Construction	Cast aluminium. Connection of driver by four screws on a 5 mm. diameter bolt circle.

DIMENSION DRAWINGS

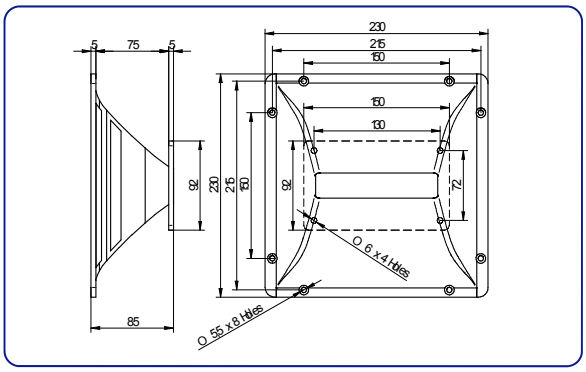

FR12A/2 Presets

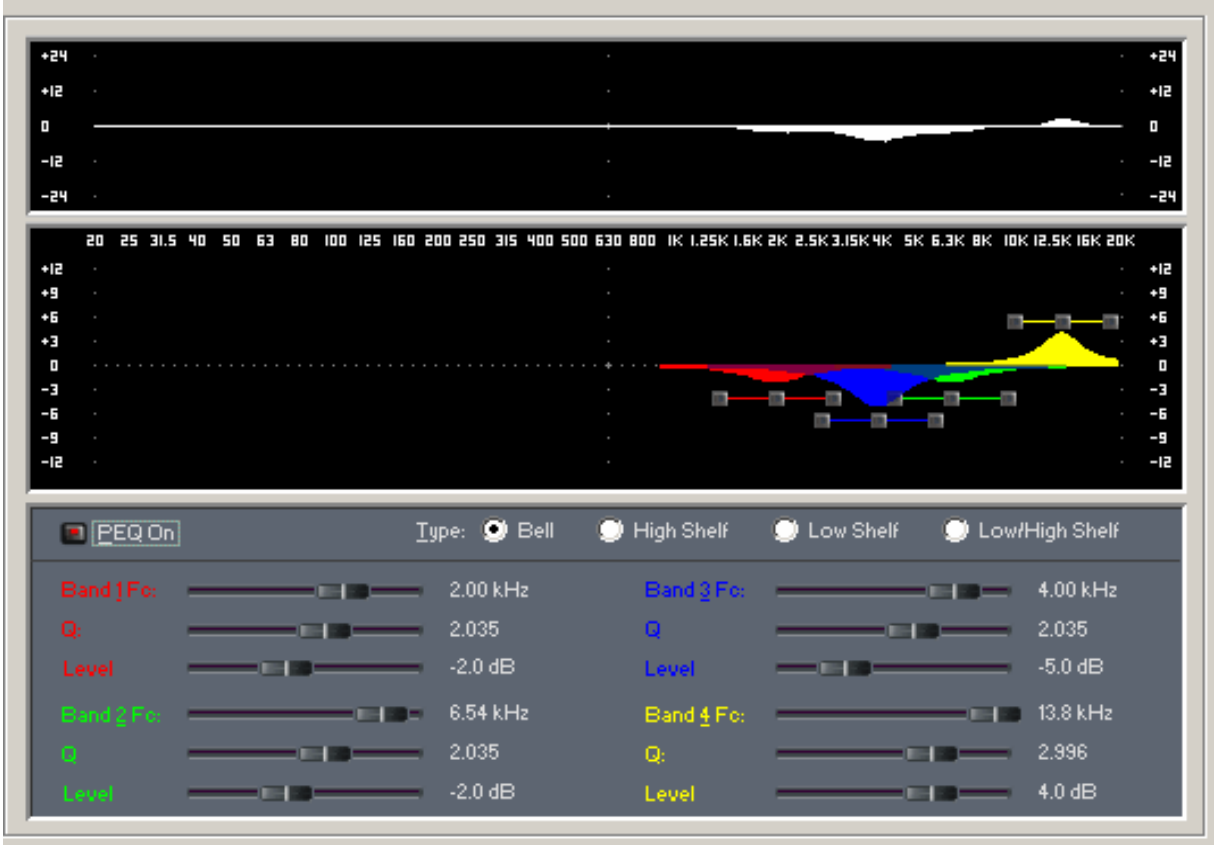

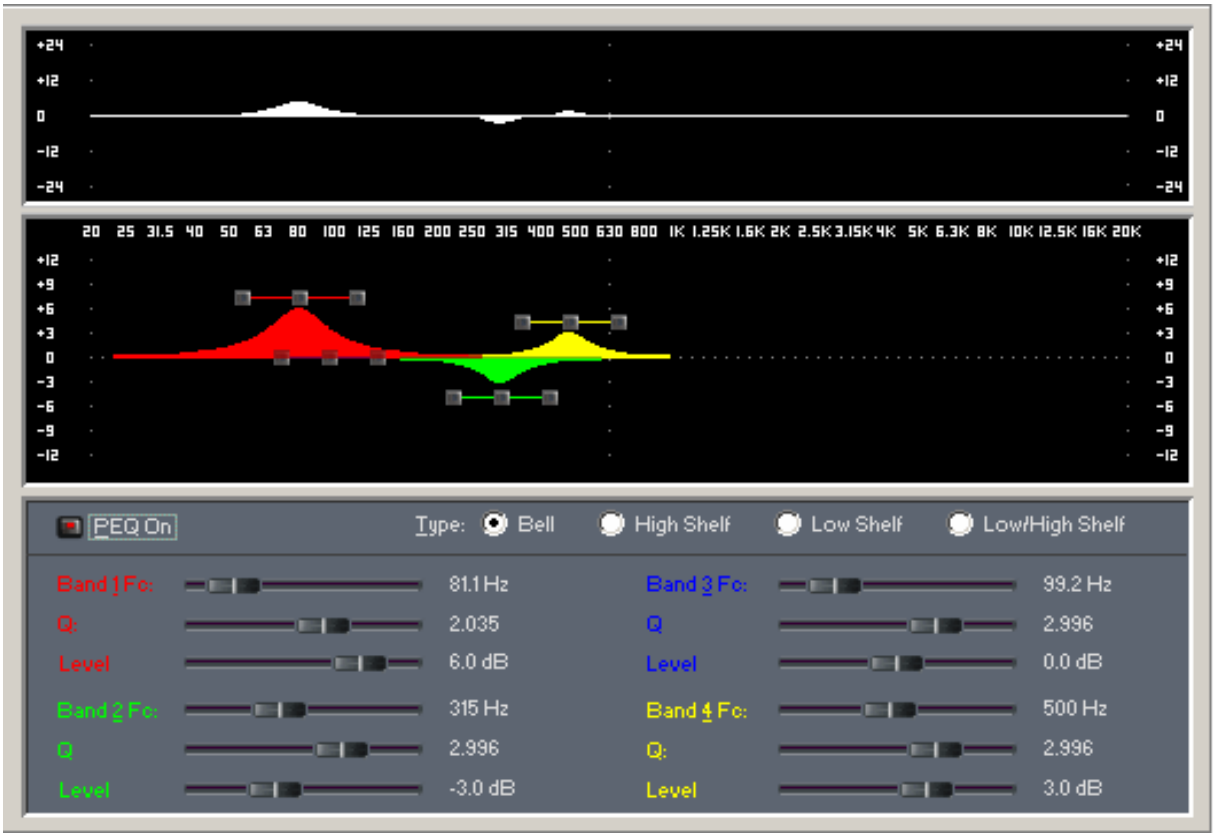

FR12A/2 Crossover

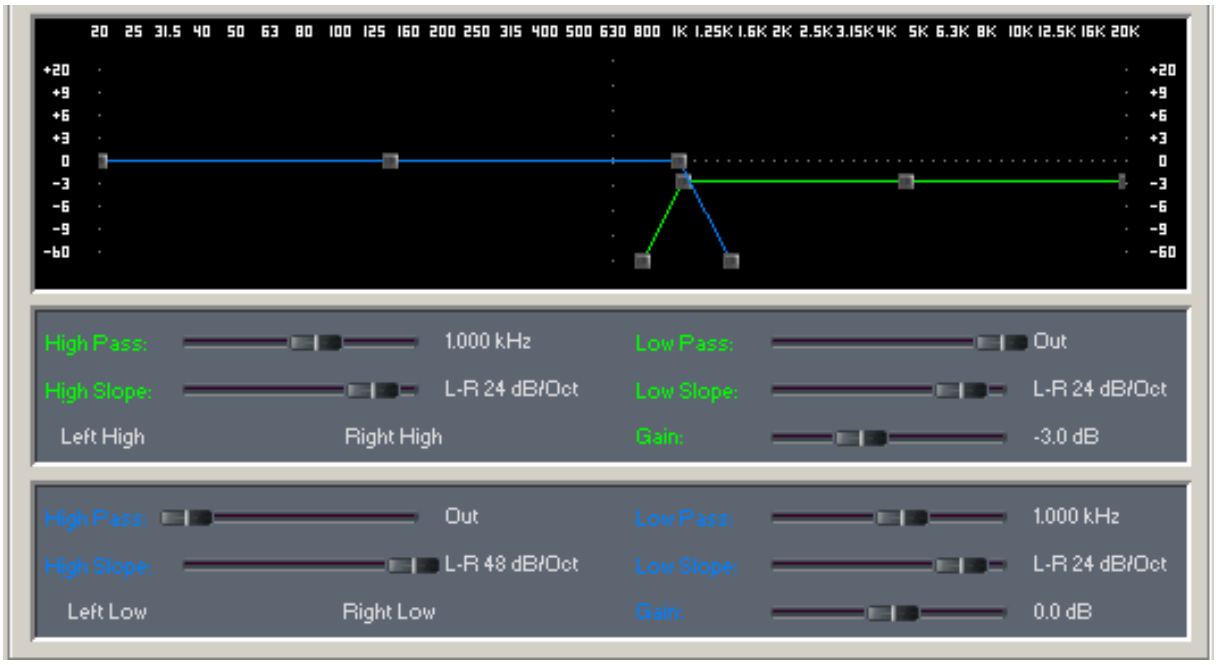

Technical Specifications

Acoustic cabinet:	FR12B
Description:	2 Way System. 12” and High Frequency unit
Power AES:	350 W.
Power Program:	700 W.
Sensitivity 2,83v @ 1m:	97 dB.
Max. SPL continuous:	122 dB.
Max. SPL peak:	128 dB.
Frequency response:	45 - 20.000Hz.
Coverage (H x V):	80º x 50º
Bass Loudspeakers:	12MW/ND
Compression Driver:	CP755/ND
Constant Directivity Horn:	TD-385
Crossover:	FP-12B/1
Hardware:	External

Base

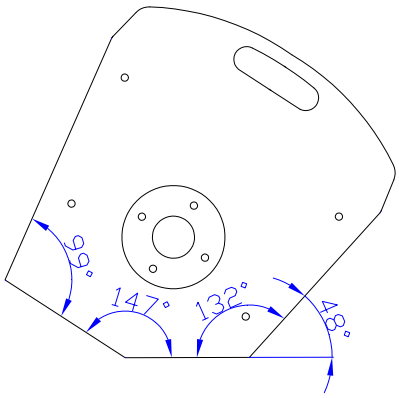

Front

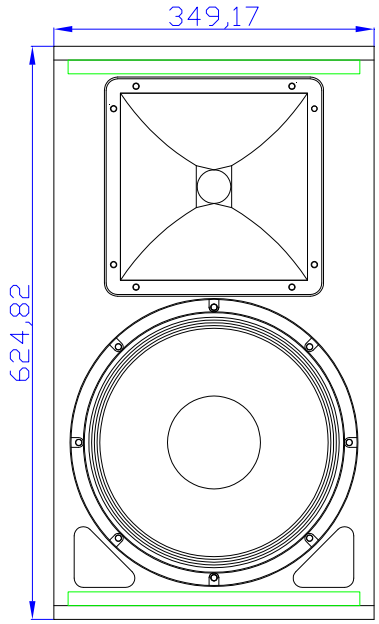

Lateral

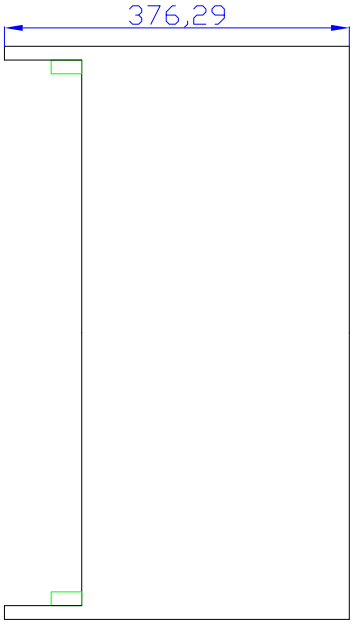

Rear

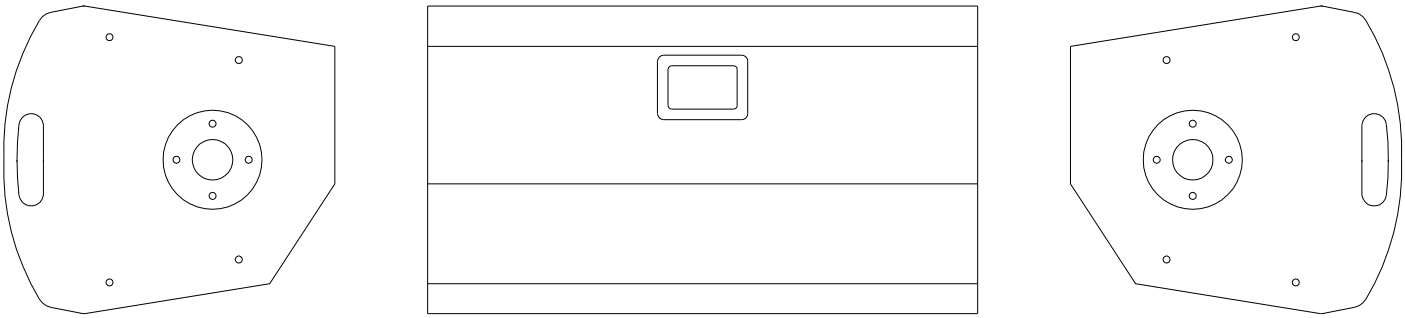

Base

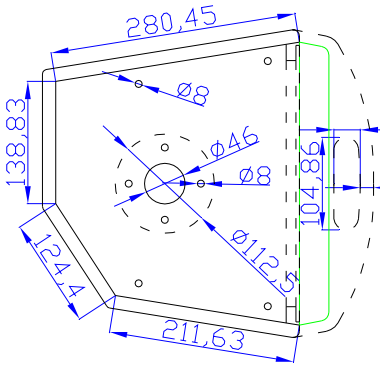

Front

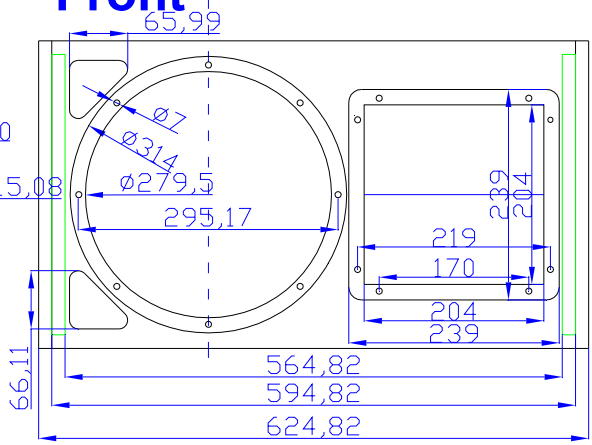

Cenital

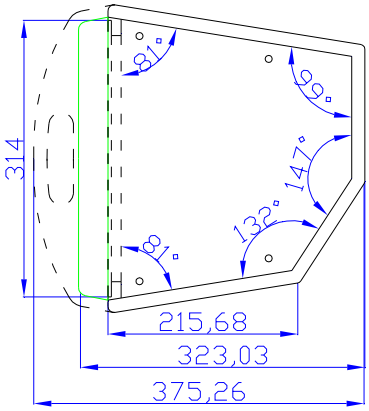

Front

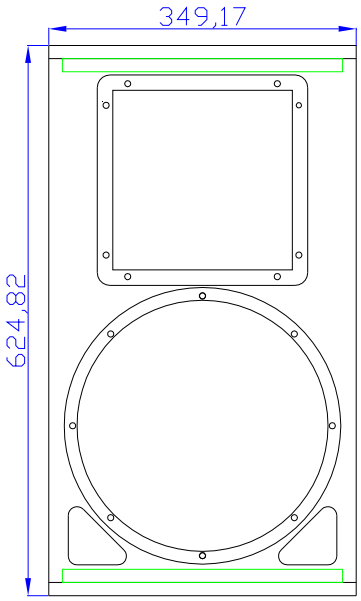

Lateral

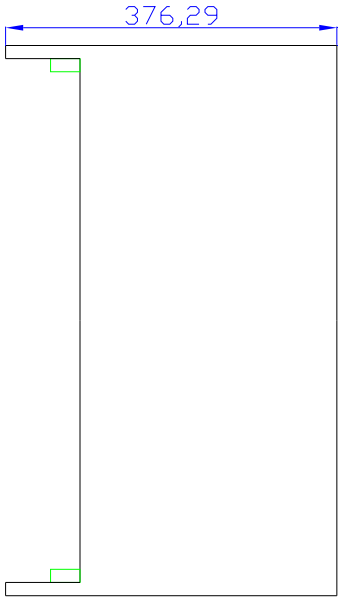

Base

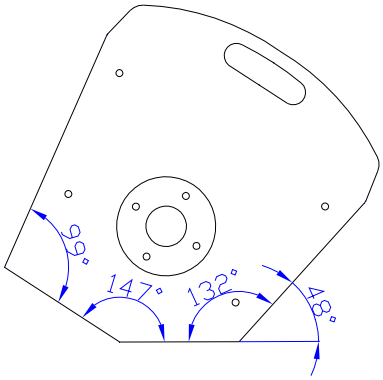

12MWNd

KEY FEATURES

- Good power handling (350 W AES)
- Sensitivity: 97 dB @ 2.83V
- Extended frequency response (35-5000 Hz)
- Neodymium magnets
- Aluminium customized basket

TECHNICAL SPECIFICATIONS

• Nominal diameter	300 mm. 12 in.
• Rated impedance	8 ohms
• Minimum impedance	7 ohms
• Power capacity*	350 w AES
• Program power	700 w
• Sensitivity	97 dB 2.83v @ 1m @ 2π
• Frequency range	35 - 5000 Hz
• Voice coil diameter	62.4 mm. 2.5 in.
• Magnetic assembly weight	2.54 kg. 5.59 lb.
• BL factor	16.9 N / A
• Voice coil length	19.5 mm
• Air gap height	10 mm
• X damage (peak to peak)	30 mm

Notes:
*The power capacity is determined according to AES2-1984 (r2003) standard.
Program power is defined as the transducer's ability to handle normal music program material.

DIMENSION DRAWINGS

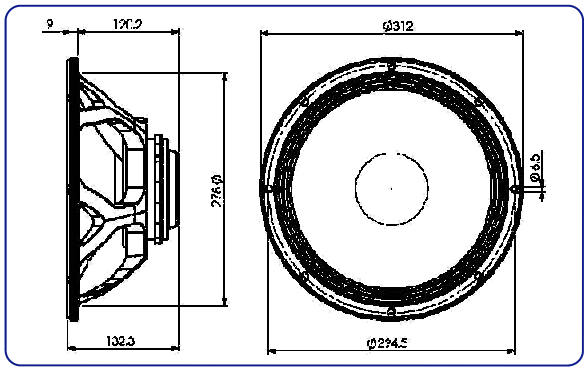

CP-755Nd

KEY FEATURES

- Composite structure diaphragm (Titanium dome & Mylar surround)
- Light neodymium magnet
- Optimized titanium phasing plug
- Superior high frequencies sound reproduction quality
- Extended frequency response (0.6 - 20 kHz)
- High sensitivity (112 dB)

TECHNICAL SPECIFICATIONS

• Throat diameter	3.6 mm. 1.4”
• Rated impedance	8 ohms
• D.C. Resistance	5.5 ohms
• Power capacity*	70 w AES above 1 kHz
• Program power	140 w above 1 kHz
• Sensitivity**	112 dB 1w @ 1m
• Frequency range	600- 20000 Hz
• Voice coil diameter	72.2 mm. 2.87 in.
• Recommended Crossover	800 Hz or higher (12 dB/oct. min.)
• Net weight	2.96 kg. 6.51 lb.

Notes:
*The power capacity is determined according to AES2-1984 (r2003) standard.
Program power is defined as the transducer's ability to handle normal music program material.
**Sensitivity was measured at 1 m distance, on axis, with 1 w input, averaged in the range 1 - 7 kHz and Coupled to a TD565 horn.

DIMENSION DRAWINGS

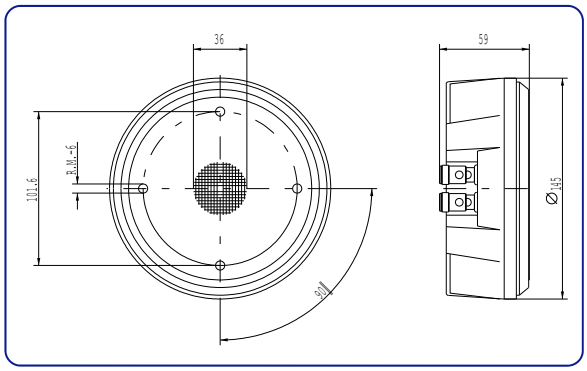

TD-385

KEY FEATURES

- Designed for compression drivers with 1.4” throat diameter
- It provides uniform response, on and off-axis with a neutral and natural frequency reproduction
- Coverage angles of 80º in the horizontal plane and 50º in the vertical plane
- Precise directivity control in the pass band
- Its square form provides more versatility when mounting in the enclosure

TECHNICAL SPECIFICATIONS

• Throat diameter	36 mm. 1.4 in.
• Horizontal beamwidth	80º (+16º, -32º) (-6 dB, 1 - 20 kHz)
• Vertical beamwidth	50º (+29º , -14º) (-6 dB, 1.6 - 20 kHz)
• Directivity factor (Q)	12.4 (average 0.63 - 16 kHz)
• Directivity index (DI)	10.5 dB (+3.5 dB, -3.2 dB)
• Cutoff frequency	800 Hz
• Dimensions (WxHxD)	235x235x120 mm. 9.25x9.25x4.72 in.
• Cutout dimensions (WxH)	204x202 mm. 8.03x7.95 in.
• Net weight	1.2 kg. 2.64 lb.
• Shipping weight	1.53 kg. 3.37 lb.
• Construction	Cast aluminium. Connection of driver by four screws on a 101.6 mm. diameter bolt circle.

DIMENSION DRAWINGS

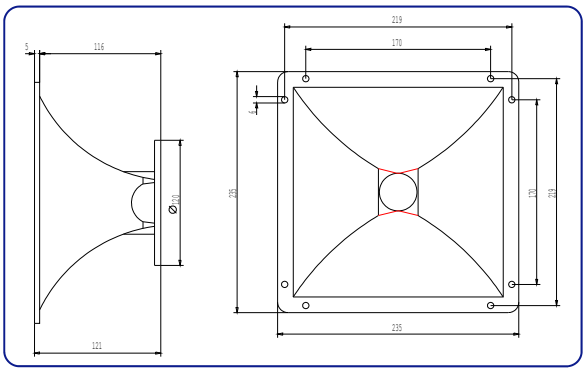

FR12B/1 Presets

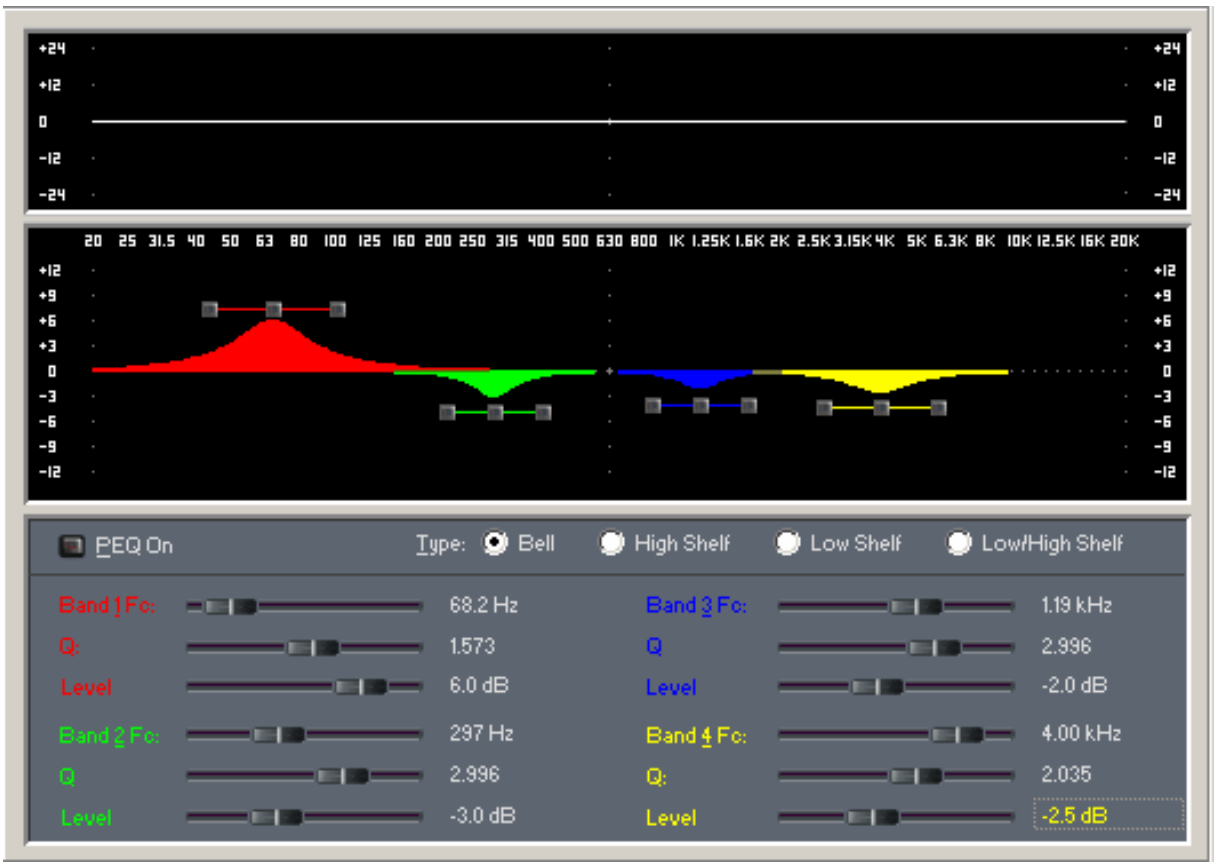

FR12B/1 Crossover

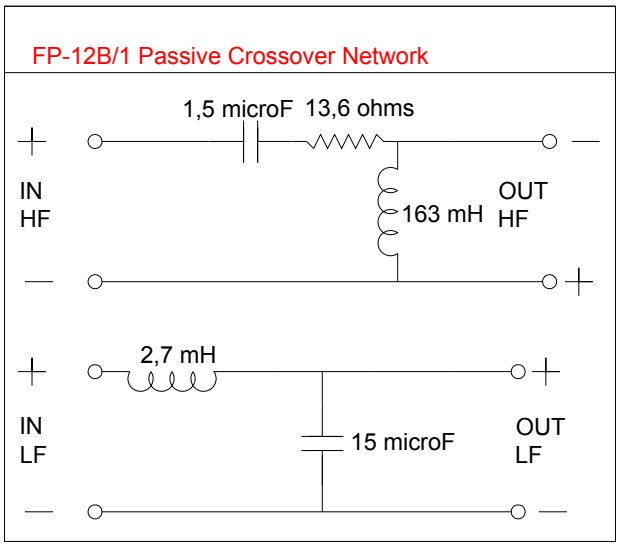

Technical Specifications

Acoustic cabinet:	FR12B
Description:	2 Way System. 12” and High Frequency unit
Power AES:	400 W.
Power Program:	800 W.
Sensitivity 2,83v @ 1m:	97 dB.
Max. SPL continuous:	123 dB.
Max. SPL peak:	129 dB.
Frequency response:	45 - 20.000Hz.
Coverage (H x V):	80º x 50º
Bass Loudspeakers:	12G40
Compression Driver:	CP755/ND
Constant Directivity Horn:	TD-385
Crossover:	FP-12B/2
Hardware:	External

Front

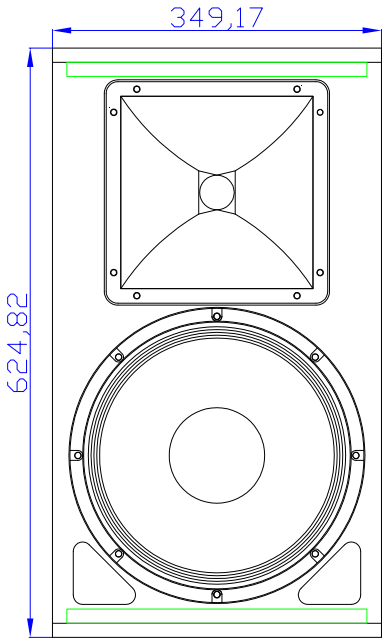

Lateral

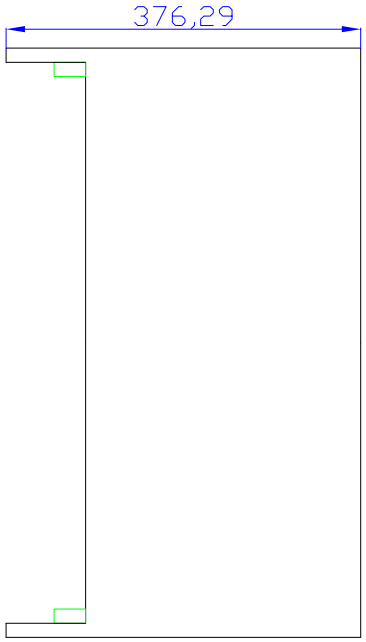

Base

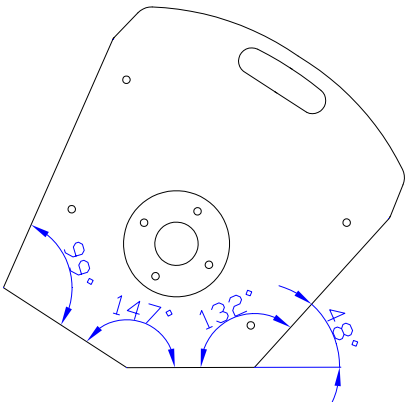

FR12B/2 CAD

Rear

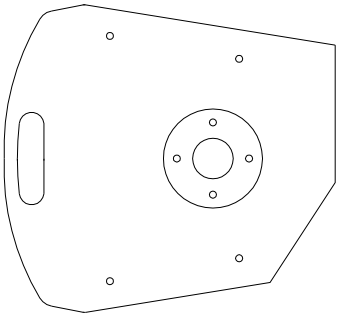

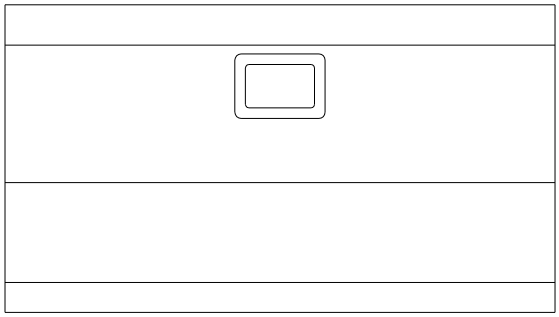

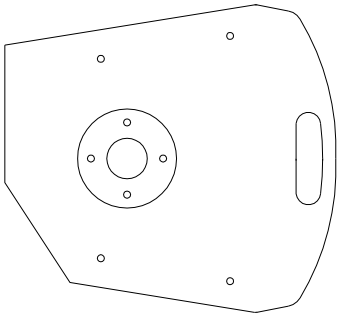

Base

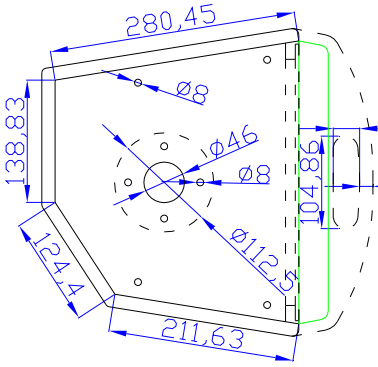

Front

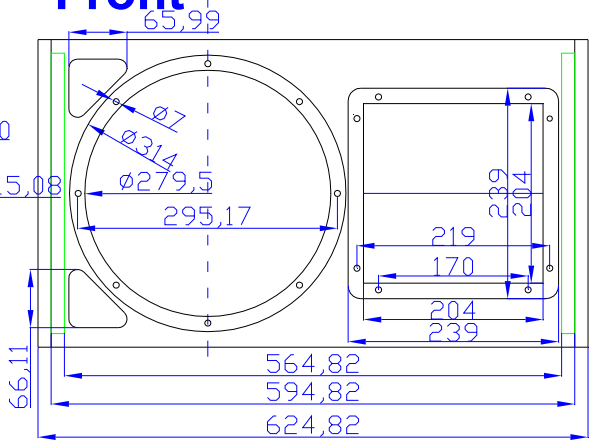

Cenital

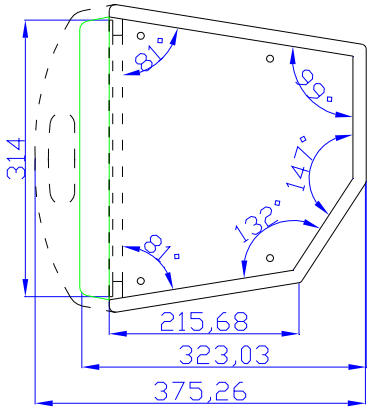

Base

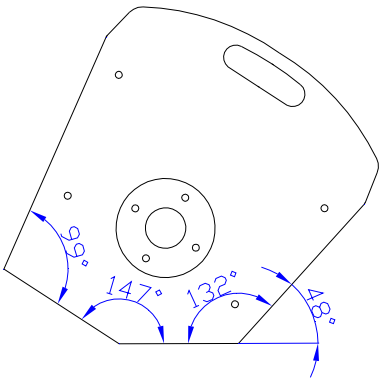

Front

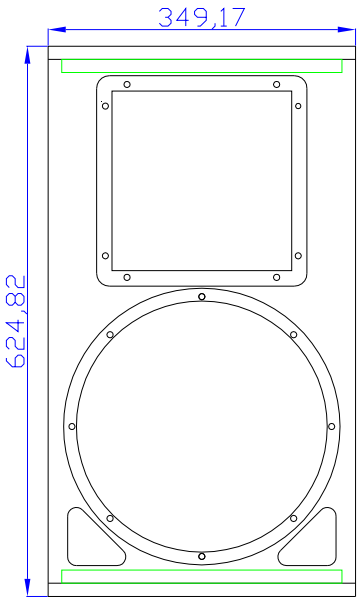

Lateral

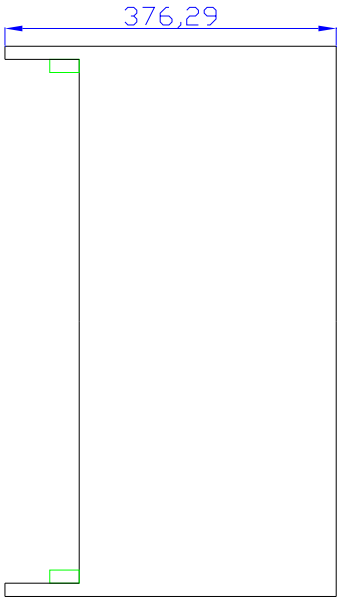

12G40

KEY FEATURES

- High power handling (500 W AES)
- 3” edgewound copper voice-coil with polyimide fiber glass former
- Optimum winding length for increased linear excursion
- Designed for woofer applications

TECHNICAL SPECIFICATIONS

• Nominal diameter	300 mm. 12 in.
• Rated impedance	8 ohms
• Minimum impedance	6.7 ohms
• Power capacity*	500 w AES
• Program power	1000 w
• Sensitivity	97 dB 2.83v @ 1m @ 2π
• Frequency range	35 - 4000 Hz
• Voice coil diameter	77 mm. 3 in.
• Magnetic assembly weight	6.3 kg. 13.9 lb.
• BL factor	18.4 N / A
• Voice coil length	20 mm
• Air gap height	8 mm
• X damage (peak to peak)	28 mm

Notes:
*The power capacity is determined according to AES2-1984 (r2003) standard.
Program power is defined as the transducer's ability to handle normal music program material.

DIMENSION DRAWINGS

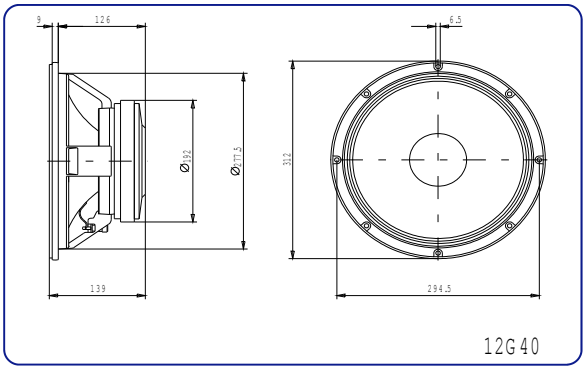

CP-755Nd

KEY FEATURES

- Composite structure diaphragm (Titanium dome & Mylar surround)
- Light neodymium magnet
- Optimized titanium phasing plug
- Superior high frequencies sound reproduction quality
- Extended frequency response (0.6 - 20 kHz)
- High sensitivity (112 dB)

TECHNICAL SPECIFICATIONS

• Throat diameter	36 mm. 1.4”
• Rated impedance	8 ohms
• D.C. Resistance	5.5 ohms
• Power capacity*	70 w AES above 1 kHz
• Program power	140 w above 1 kHz
• Sensitivity**	112 dB 1w @ 1m
• Frequency range	600- 20000 Hz
• Voice coil diameter	72.2 mm. 2.87 in.
• Recommended Crossover	800 Hz or higher (12 dB/oct. min.)
• Net weight	2.96 kg. 6.51 lb.

Notes:
*The power capacity is determined according to AES2-1984 (r2003) standard.
Program power is defined as the transducer's ability to handle normal music program material.
**Sensitivity was measured at 1 m distance, on axis, with 1 w input, averaged in the range 1 - 7 kHz and Coupled to a TD565 horn.

DIMENSION DRAWINGS

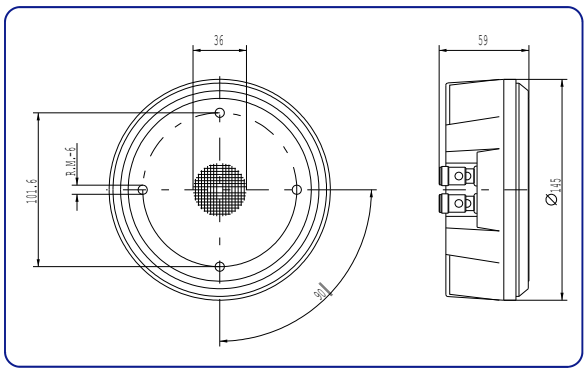

TD-385

KEY FEATURES

- Designed for compression drivers with 1.4” throat diameter
- It provides uniform response, on and off-axis with a neutral and natural frequency reproduction
- Coverage angles of 80º in the horizontal plane and 50º in the vertical plane
- Precise directivity control in the pass band
- Its square form provides more versatility when mounting in the enclosure

TECHNICAL SPECIFICATIONS

• Throat diameter	36 mm. 1.4 in.
• Horizontal beamwidth	80º (+16º, -32º) (-6 dB, 1 - 20 kHz)
• Vertical beamwidth	50º (+29º , -14º) (-6 dB, 1.6 - 20 kHz)
• Directivity factor (Q)	12.4 (average 0.63 - 16 kHz)
• Directivity index (DI)	10.5 dB (+3.5 dB, -3.2 dB)
• Cutoff frequency	800 Hz
• Dimensions (WxHxD)	235x235x120 mm. 9.25x9.25x4.72 in.
• Cutout dimensions (WxH)	204x202 mm. 8.03x7.95 in.
• Net weight	1.2 kg. 2.64 lb.
• Shipping weight	1.53 kg. 3.37 lb.
• Construction	Cast aluminium. Connection of driver by four screws on a 101.6 mm. diameter bolt circle.

DIMENSION DRAWINGS

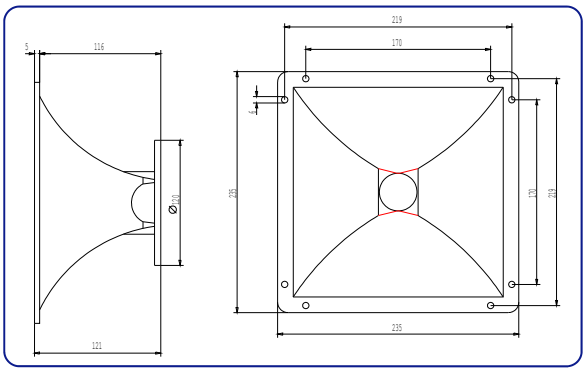

FR12B/2 Presets

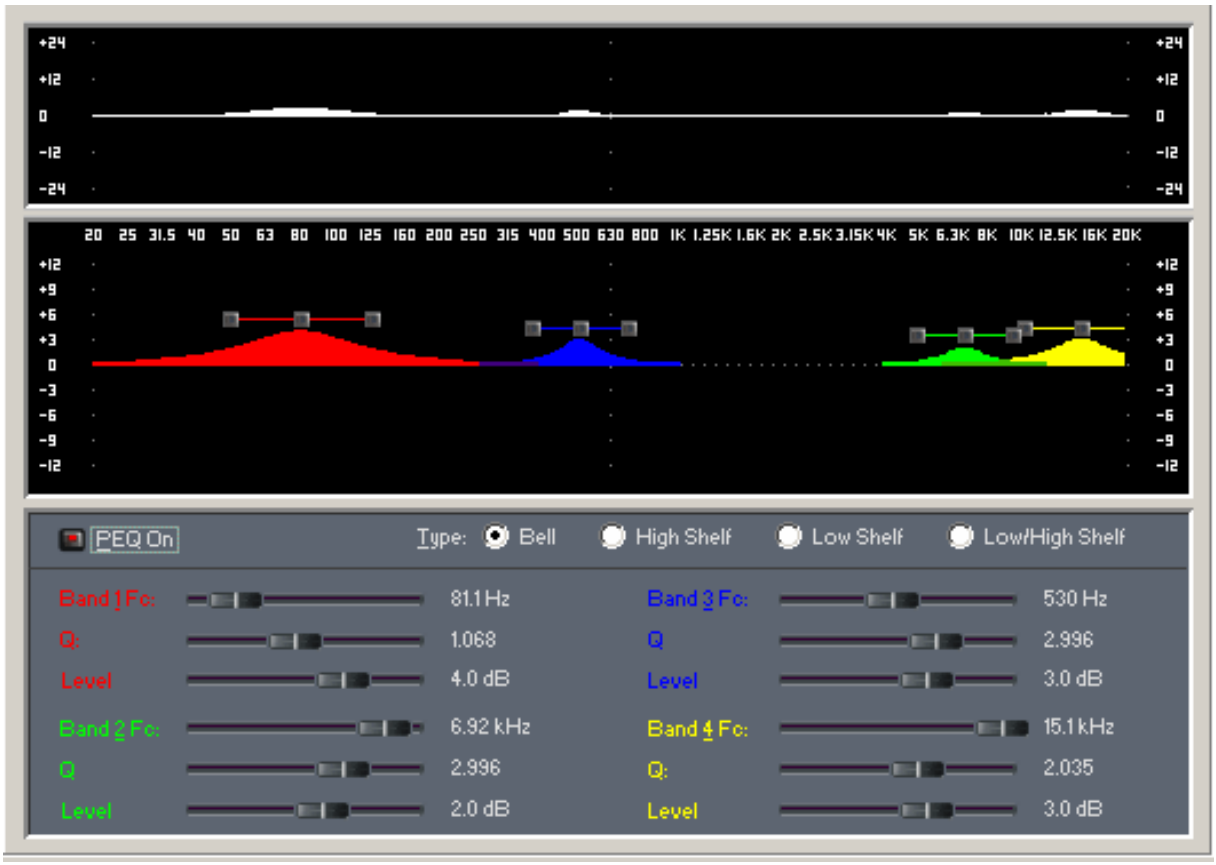

FR12B/2 Crossover

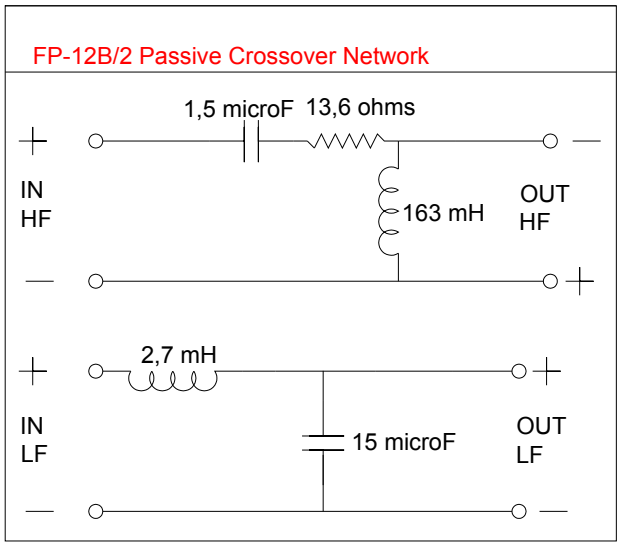

Technical Specifications

Acoustic cabinet:	FR15A
Description:	2 Way System. 15” and High Frequency unit
Power AES:	1.000 W.
Power Program:	2.000 W.
Sensitivity 2,83v @ 1m:	97 dB.
Max. SPL continuous:	127 dB.
Max. SPL peak:	133 dB.
Frequency response:	40 - 20.000 Hz.
Coverage (H x V):	90º x 40º
Bass Loudspeakers:	15P1000ND
Compression Driver:	TPL150
Constant Directivity Horn:	TD TPL
Crossover:	External
Hardware:	External

Front

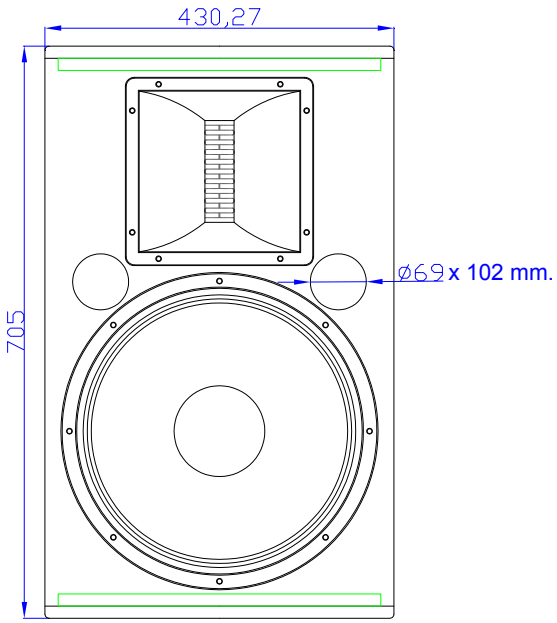

Lateral

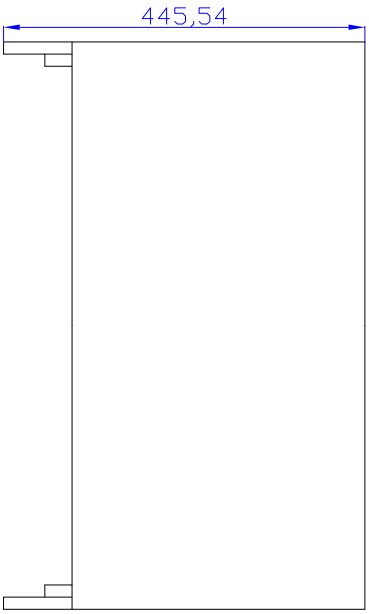

Base

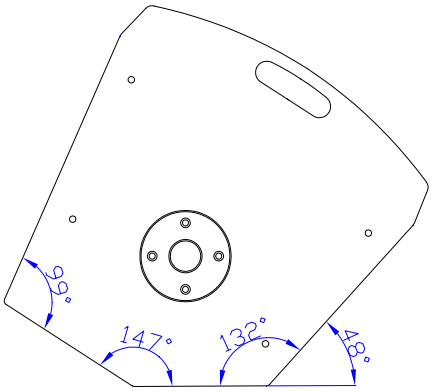

FR15A/1 CAD

Rear

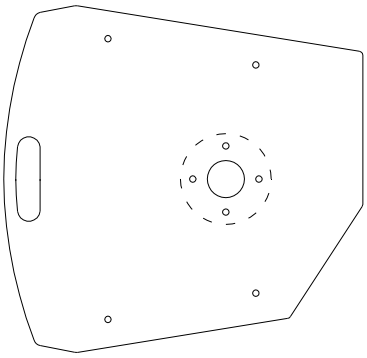

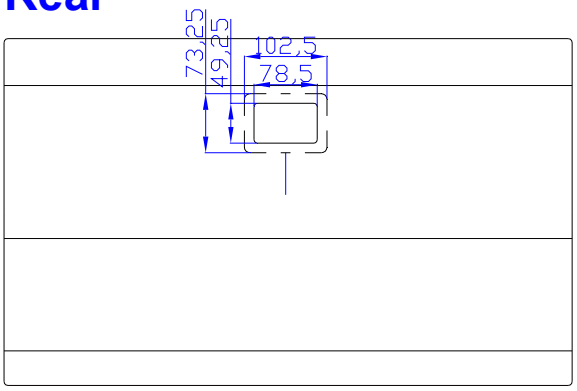

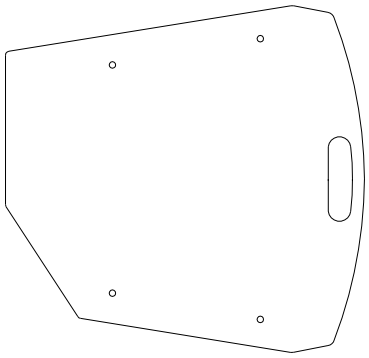

Base

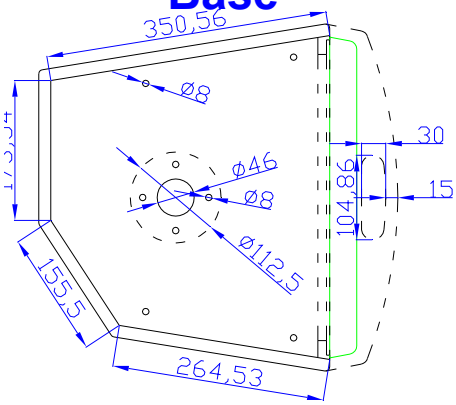

Front

Section

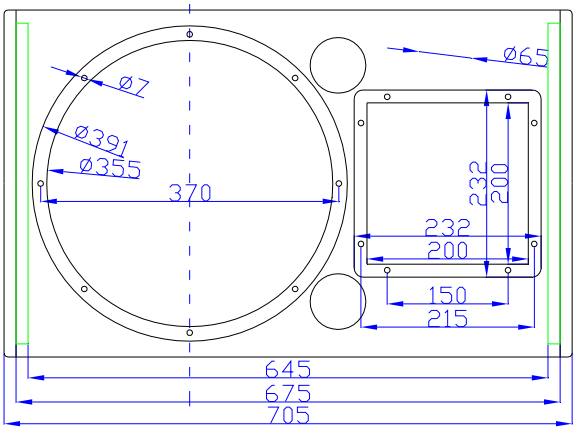

Cenital

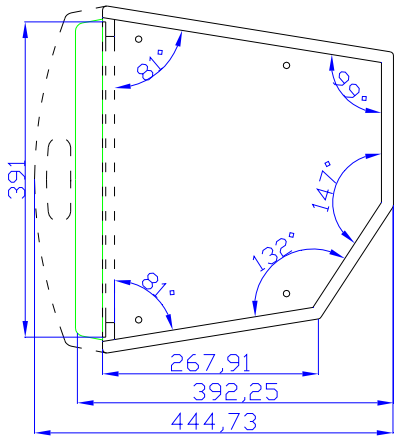

Base

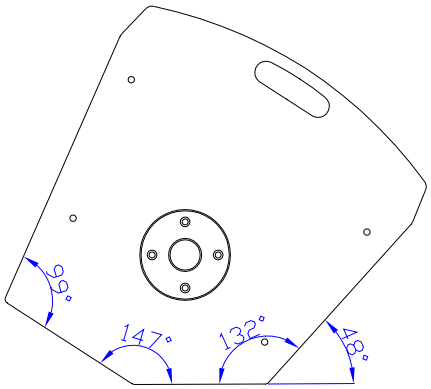

Front

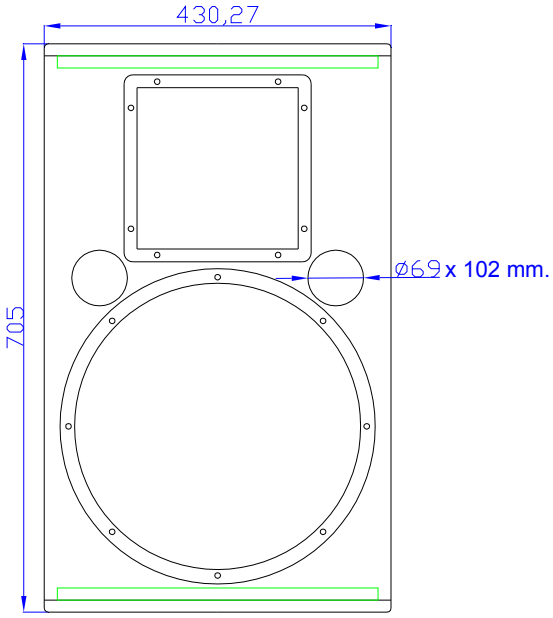

Lateral

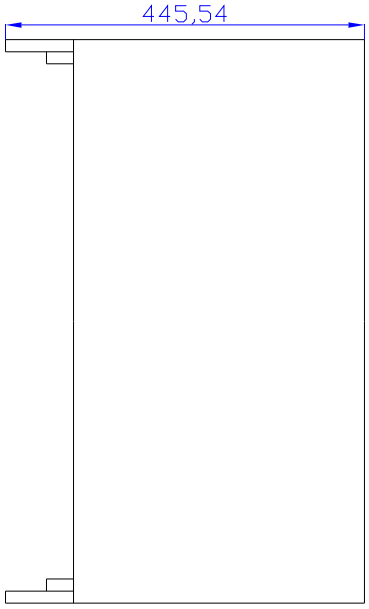

15P1000Nd

KEY FEATURES

- Real 1000 W AES power handling
- Sensitivity: 97 dB @ 2.83V
- 4" Duo Technology voice coil
- Forced air convection circuit for low power compression
- Extended controlled displacement: Xmax ± 8 mm.
- Massive mechanical displacement capability: 52 mm p-p

TECHNICAL SPECIFICATIONS

• Nominal diameter	380 mm. 15 in.
• Rated impedance	8 ohms
• Minimum impedance	6.3 ohms
• Power capacity*	1000 w AES
• Program power	2000 w
• Sensitivity	97 dB 2.83v @ 1m @ 2π
• Frequency range	30 - 2000 Hz
• Voice coil diameter	100 mm. 4 in.
• Magnetic assembly weight	4.62 kg. 10.16 lb.
• BL factor	24.3 N / A
• Voice coil length	21 mm
• Air gap height	12 mm
• X damage (peak to peak)	52 mm

Notes:
*The power capacity is determined according to AES2-1984 (r2003) standard.
Program power is defined as the transducer's ability to handle normal music program material.

DIMENSION DRAWINGS

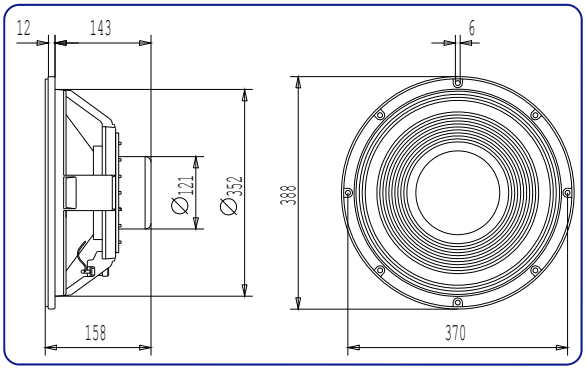

TPL-150

KEY FEATURES

- Superior sound reproduction quality
- Extended frequency response (1 - 23 kHz)
- High sensitivity (99 dB)
- Extremely linear frequency response
- Low distortion
- Designed for the high frequencies reproduction

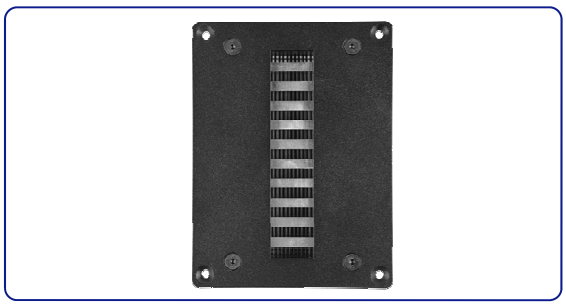

TECHNICAL SPECIFICATIONS

• Rated impedance	8 ohms
• D.C. Resistance	5.9 ohms
• Power capacity*	80 w AES above 1 kHz
• Program power	160 w above 1 kHz
• Sensitivity**	99 dB 1w @ 1m
• Frequency range	1- 23000 Hz
• Voice coil diameter	100 mm. 4 in.
• Recommended Crossover	1 kHz or higher (12 dB/oct. min.)
• Net weight	2.18 kg. 4.8 lb.

Notes:
*The power capacity is determined according to AES2-1984 (r2003) standard.
Program power is defined as the transducer's ability to handle normal music program material.
**Sensitivity was measured at 1 m distance, on axis, with 1 w input, averaged in the range 2.5 - 20 kHz.

DIMENSION DRAWINGS

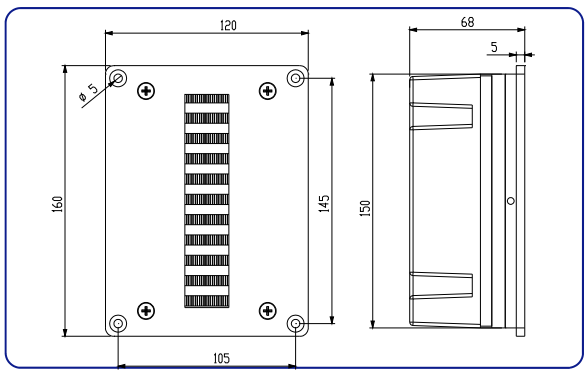

TD-TPL

KEY FEATURES

- Designed to be used with TPL-150 tweeter
- Coverage angles of 80º in the horizontal plane and 30º in the vertical plane
- Precise directivity control in the pass band
- Cast aluminium construction

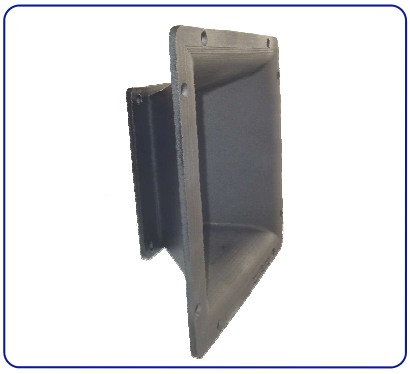

TECHNICAL SPECIFICATIONS

• Throat dimmensions (WxH)	12 x 208 mm. 0.47 x 8.19 in.
• Horizontal beamwidth	80º (+9º, -20º) (-6 dB, 1.2 - 16 kHz)
• Vertical beamwidth	30º (+27º , -21º) (-6 dB, 2 - 16 kHz)
• Directivity factor (Q)	27 (average 1.2 - 16 kHz)
• Directivity index (DI)	13 dB (+6 dB, -4.5 dB)
• Cutoff frequency	800 Hz
• Dimensions (WxHxD)	230x230x85 mm. 9.05x9.05x3.35 in.
• Cutout dimensions (WxH)	195x195 mm. 7.68x7.68 in.
• Net weight	1.5 kg. 3.3 lb.
• Construction	Cast aluminium. Connection of driver by four screws on a 5 mm. diameter bolt circle.

DIMENSION DRAWINGS

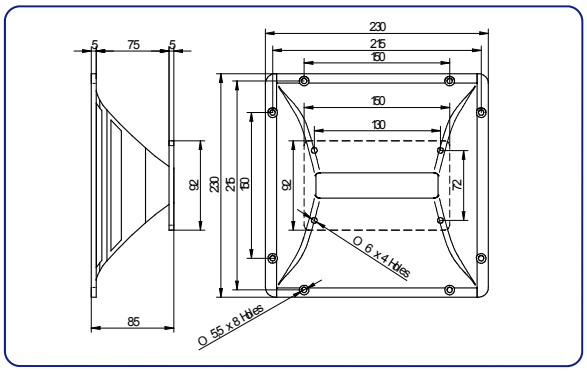

FR15A/1 Presets

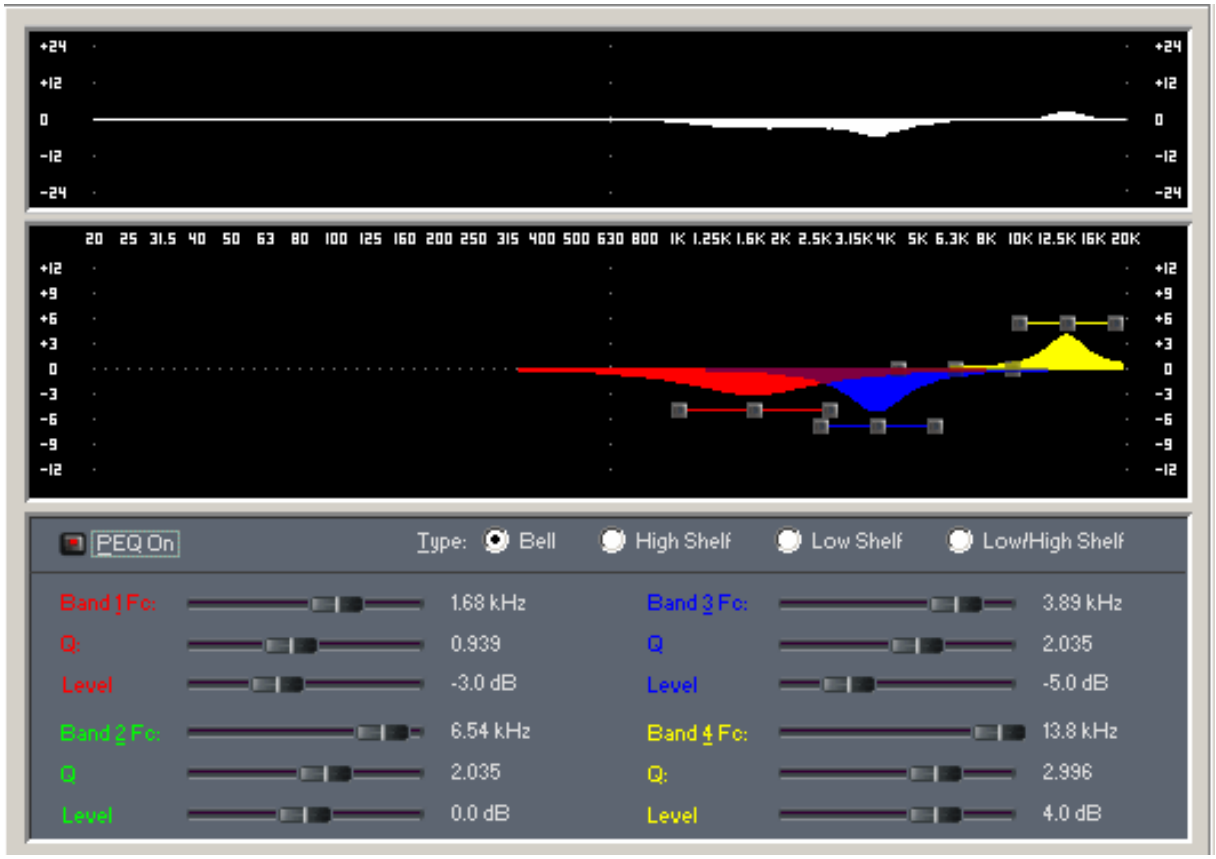

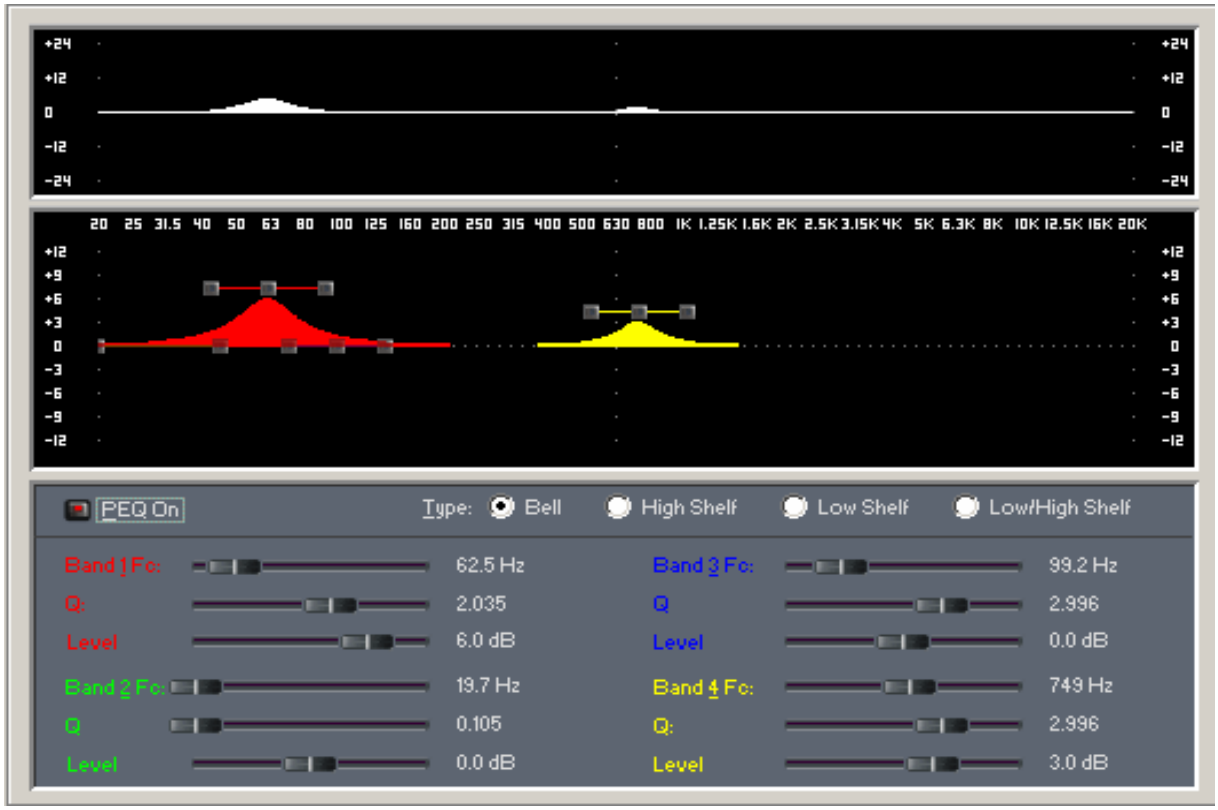

FR15A/1 Crossover

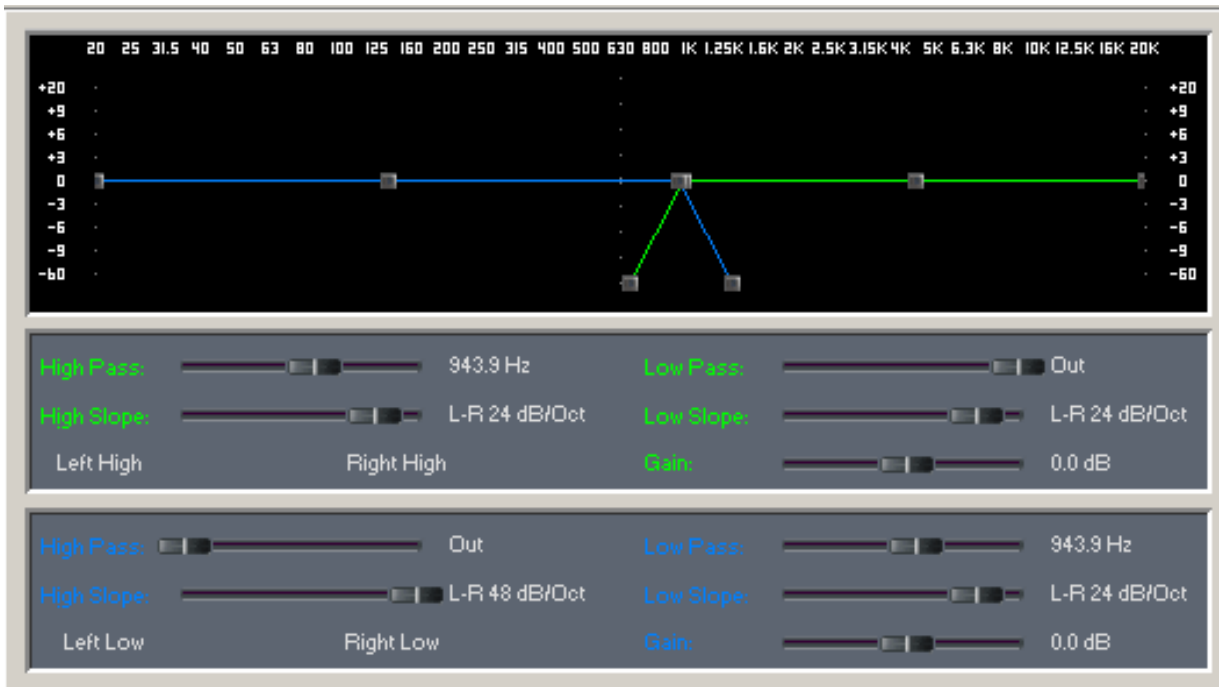

Technical Specifications

Acoustic cabinet:	FR15A
Description:	2 Way System. 15” and High Frequency unit
Power AES:	800 W.
Power Program:	1.600 W.
Sensitivity 2,83v @ 1m:	100 dB.
Max. SPL continuous:	129 dB.
Max. SPL peak:	135 dB.
Frequency response:	45 - 25.000Hz.
Coverage (H x V):	90º x 40º
Bass Loudspeakers:	15P80ND
Compression Driver:	TPL150
Constant Directivity Horn:	TD TPL
Crossover:	External
Hardware:	External

Base

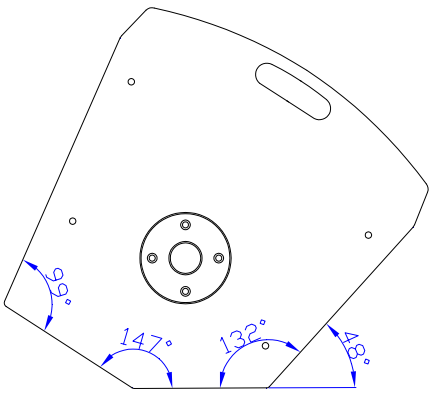

Front

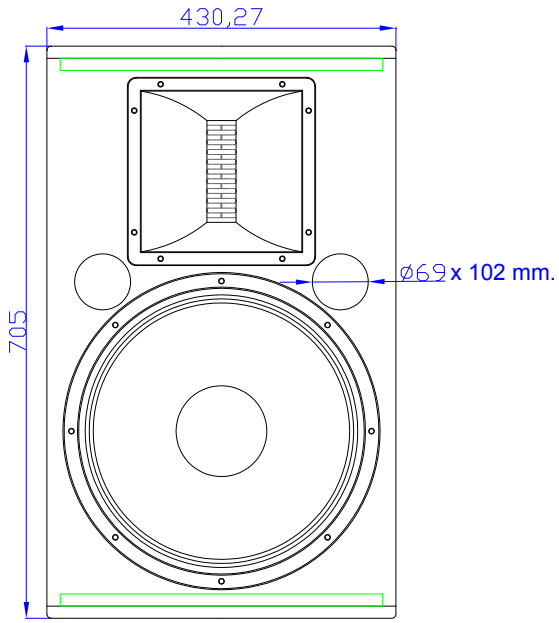

Lateral

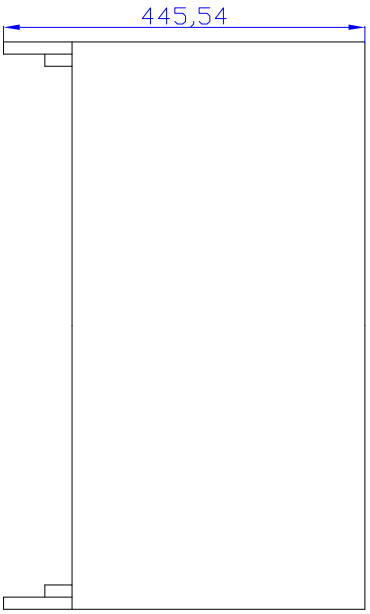

FR15A/2 CAD

Rear

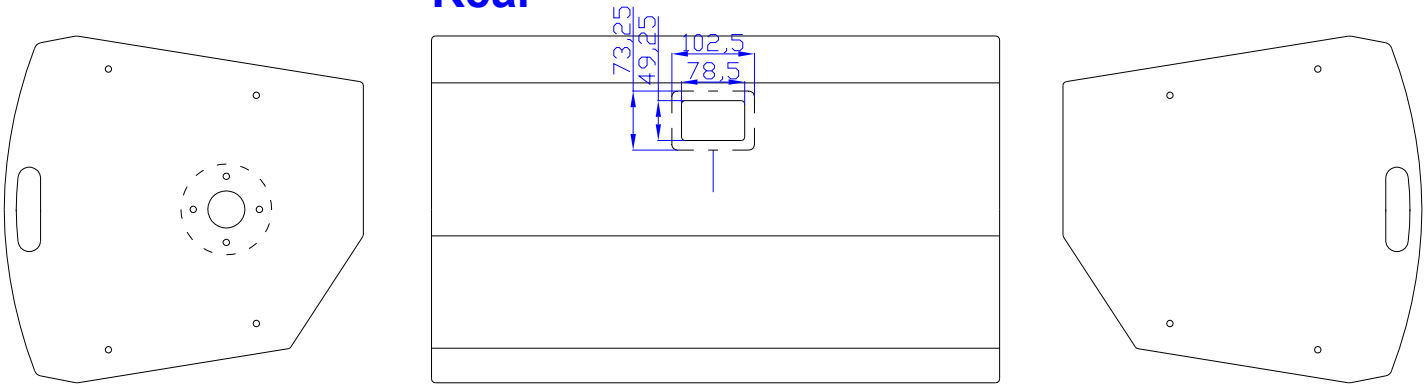

Base

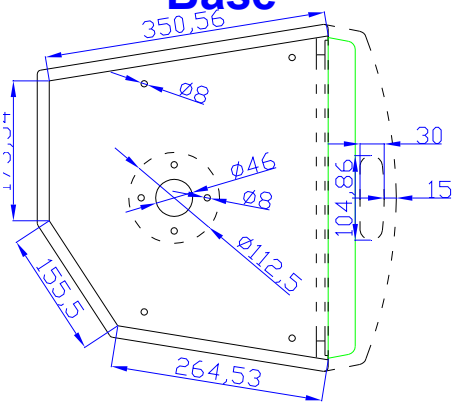

Section

Front

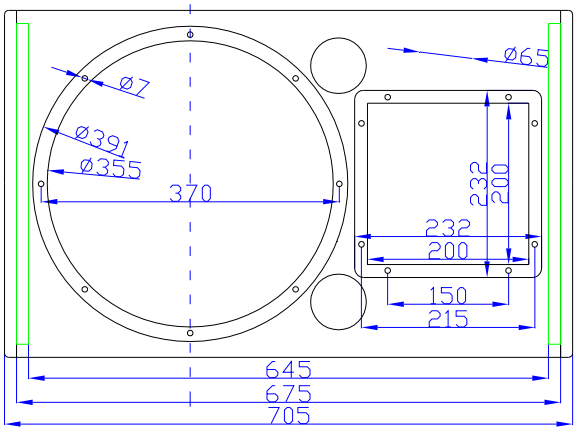

Cenital

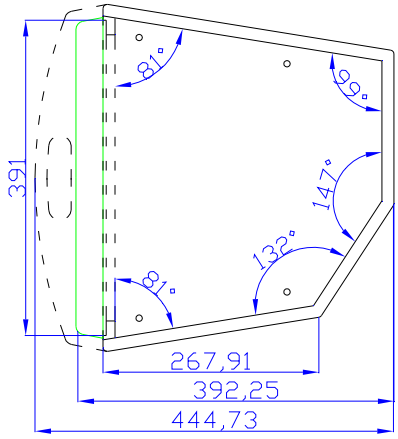

Base

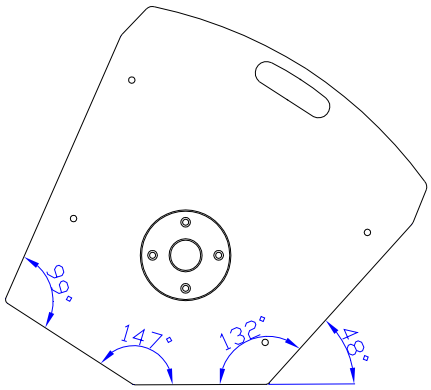

Front

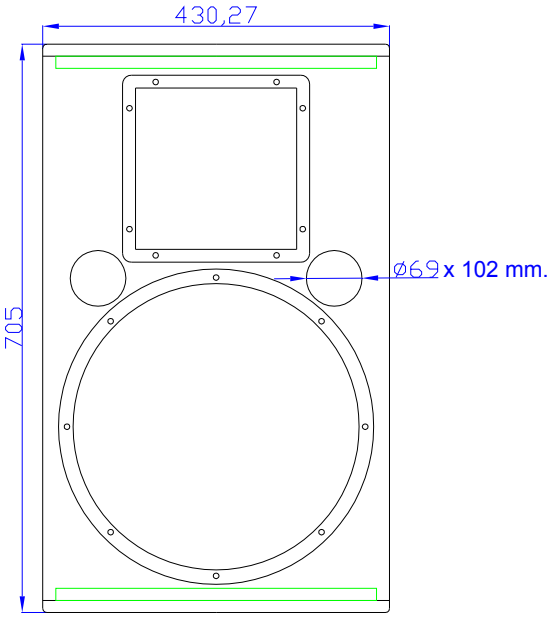

Lateral

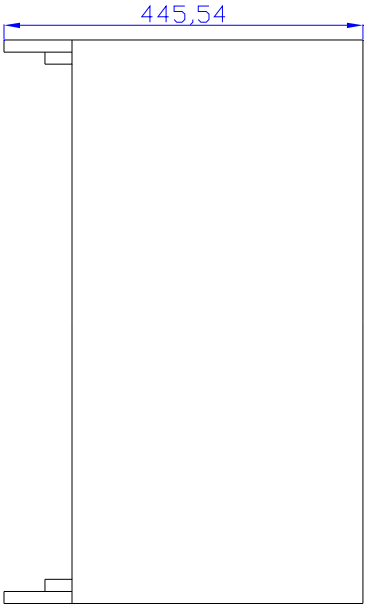

15P80Nd

KEY FEATURES

- Real 800 W AES power handling
- Sensitivity: 100 dB @ 2.83V
- 4” Duo Technology voice coil
- Forced air convection circuit for low power compression
- Extended controlled displacement: Xmax ± 7.5 mm.
- Massive mechanical displacement capability: 52 mm p-p

TECHNICAL SPECIFICATIONS

• Nominal diameter	380 mm. 15 in.
• Rated impedance	8 ohms
• Minimum impedance	6.6 ohms
• Power capacity*	800 w AES
• Program power	1600 w
• Sensitivity	100 dB 2.83v @ 1m @ 2π
• Frequency range	30 - 5000 Hz
• Voice coil diameter	100 mm. 4 in.
• Magnetic assembly weight	4.62 kg. 10.16 lb.
• BL factor	23.6 N / A
• Voice coil length	20 mm
• Air gap height	12 mm
• X damage (peak to peak)	52 mm

Notes:
*The power capacity is determined according to AES2-1984 (r2003) standard.
Program power is defined as the transducer's ability to handle normal music program material.

DIMENSION DRAWINGS

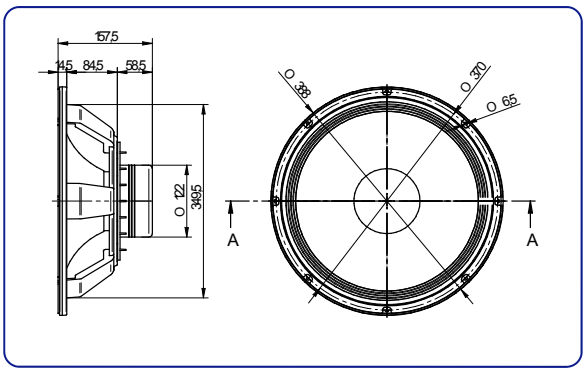

TPL-150

KEY FEATURES

- Superior sound reproduction quality
- Extended frequency response (1 - 23 kHz)
- High sensitivity (99 dB)
- Extremely linear frequency response
- Low distortion
- Designed for the high frequencies reproduction

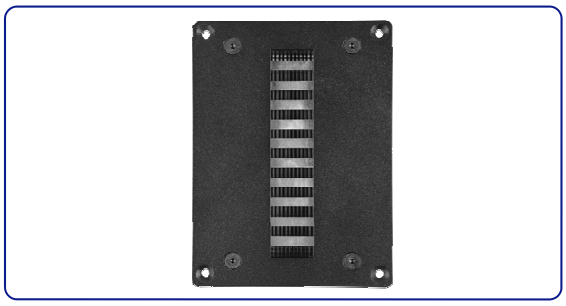

TECHNICAL SPECIFICATIONS

• Rated impedance	8 ohms
• D.C. Resistance	5.9 ohms
• Power capacity*	80 w AES above 1 kHz
• Program power	160 w above 1 kHz
• Sensitivity**	99 dB 1w @ 1m
• Frequency range	1- 23000 Hz
• Voice coil diameter	100 mm. 4 in.
• Recommended Crossover	1 kHz or higher (12 dB/oct. min.)
• Net weight	2.18 kg. 4.8 lb.

Notes:
*The power capacity is determined according to AES2-1984 (r2003) standard.
Program power is defined as the transducer's ability to handle normal music program material.
**Sensitivity was measured at 1 m distance, on axis, with 1 w input, averaged in the range 2.5 - 20 kHz.

DIMENSION DRAWINGS

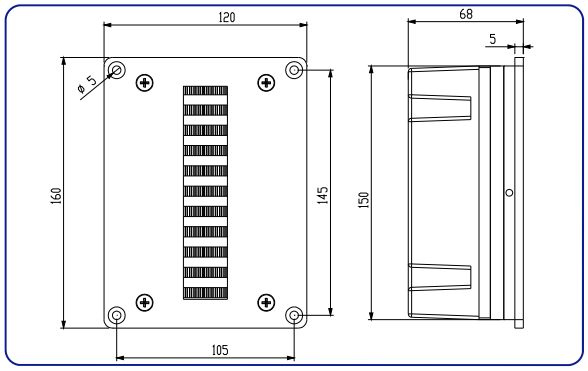

TD-TPL

KEY FEATURES

- Designed to be used with TPL-150 tweeter
- Coverage angles of 80º in the horizontal plane and 30º in the vertical plane
- Precise directivity control in the pass band
- Cast aluminium construction

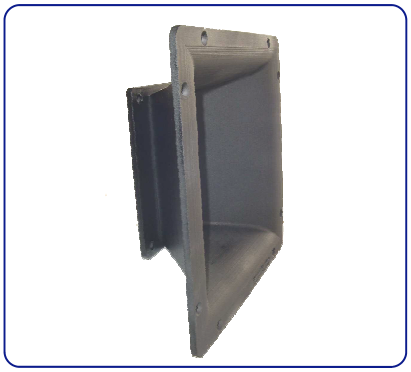

TECHNICAL SPECIFICATIONS

• Throat dimmensions (WxH)	12 x 208 mm. 0.47 x 8.19 in.
• Horizontal beamwidth	80º (+9º, -20º) (-6 dB, 1.2 - 16 kHz)
• Vertical beamwidth	30º (+27º , -21º) (-6 dB, 2 - 16 kHz)
• Directivity factor (Q)	27 (average 1.2 - 16 kHz)
• Directivity index (DI)	13 dB (+6 dB, -4.5 dB)
• Cutoff frequency	800 Hz
• Dimensions (WxHxD)	230x230x85 mm. 9.05x9.05x3.35 in.
• Cutout dimensions (WxH)	195x195 mm. 7.68x7.68 in.
• Net weight	1.5 kg. 3.3 lb.
• Construction	Cast aluminium. Connection of driver by four screws on a 5 mm. diameter bolt circle.

DIMENSION DRAWINGS

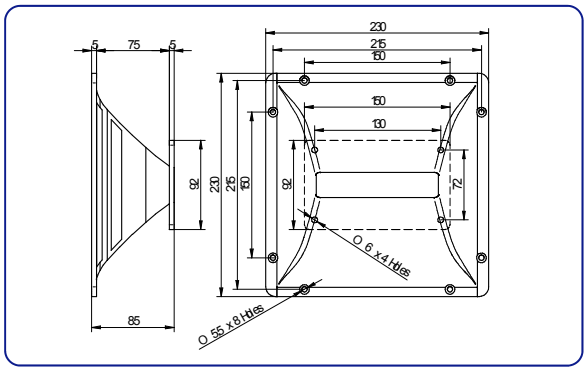

FR15A/2 Presets

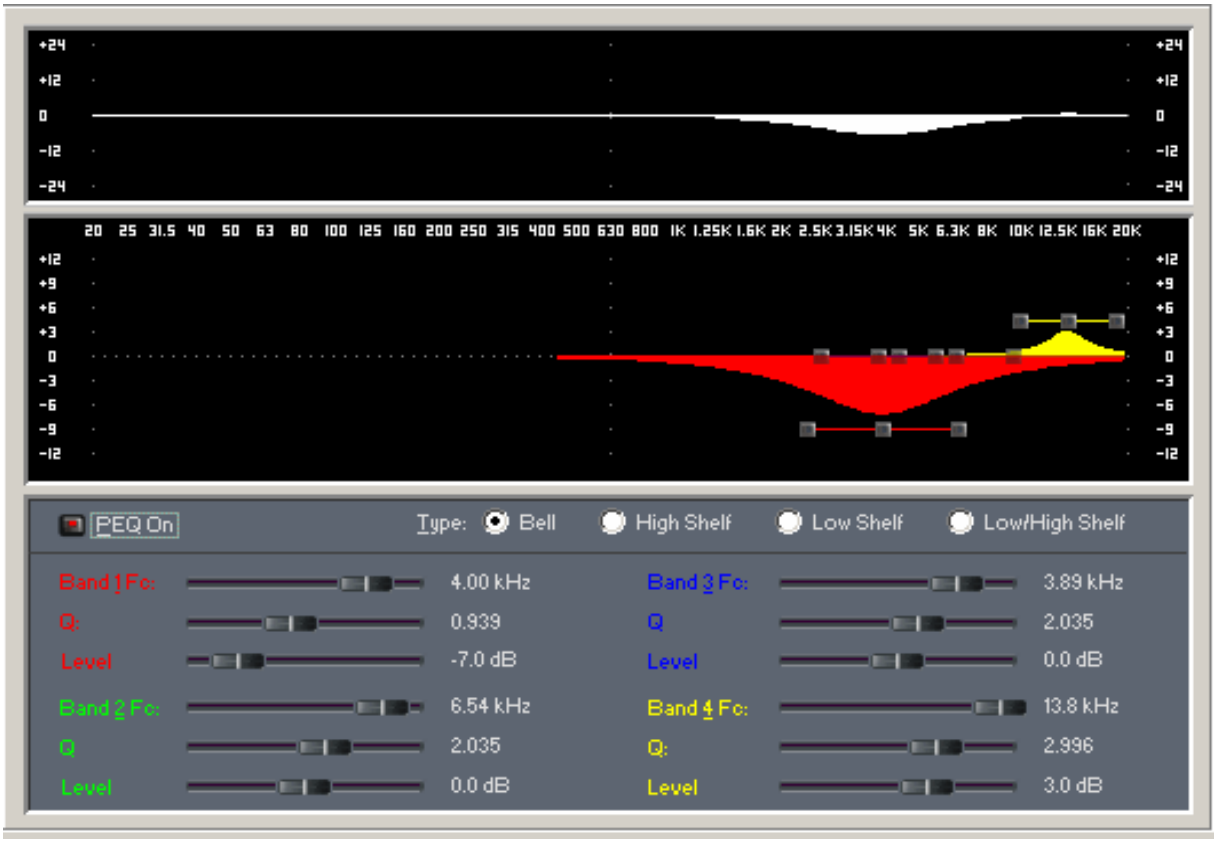

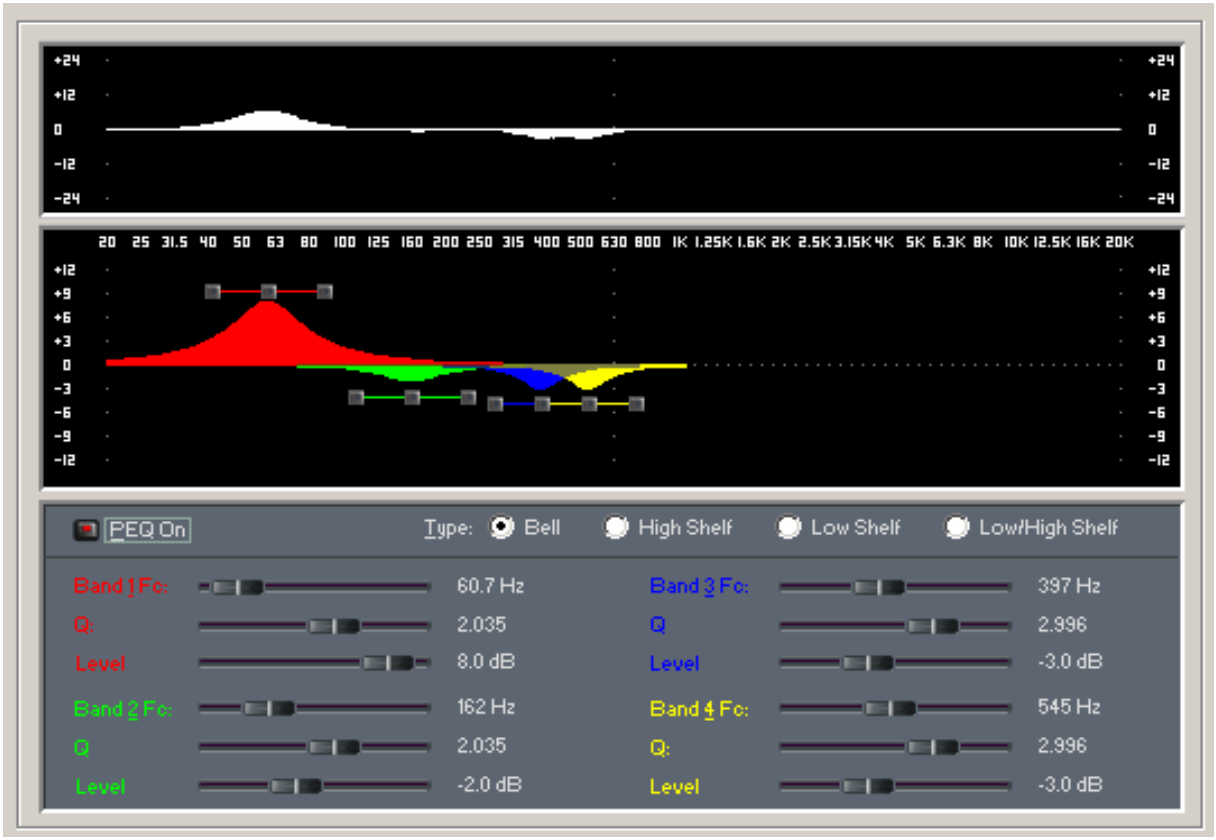

FR15A/2 Crossover

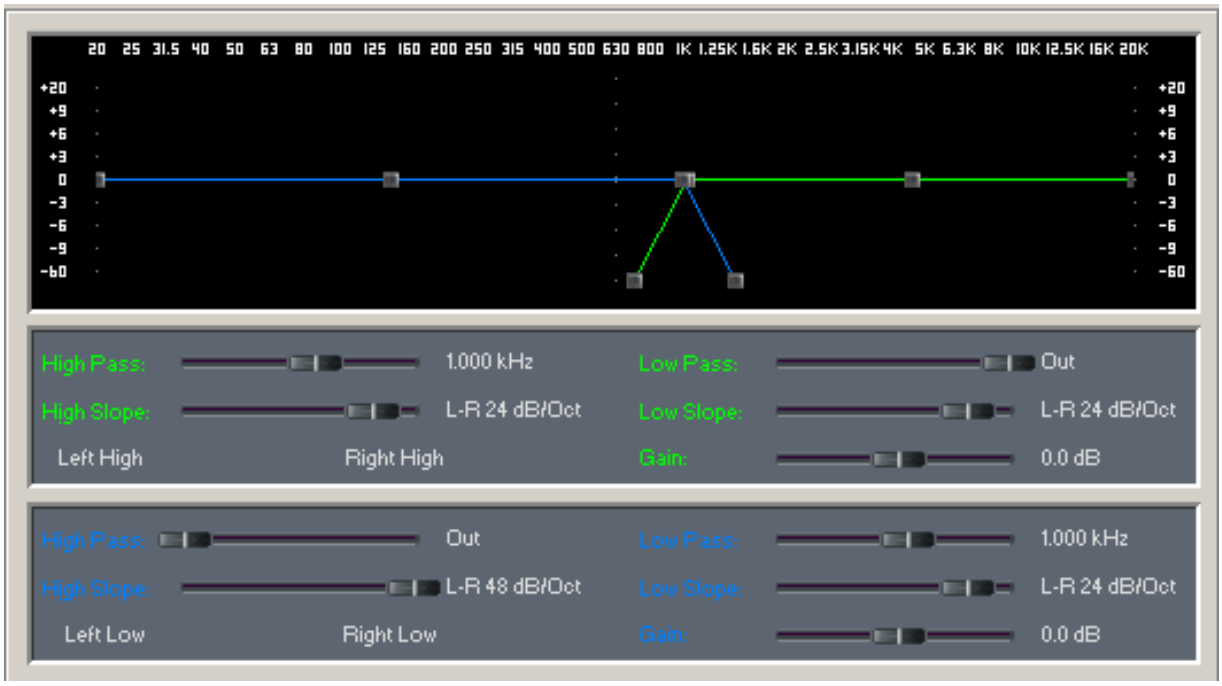

Technical Specifications

Acoustic cabinet:	FR15B
Description:	2 Way System. 15” and High Frequency unit
Power AES:	1.000 W.
Power Program:	2.000 W.
Sensitivity 2,83v @ 1m:	97 dB.
Max. SPL continuous:	127 dB.
Max. SPL peak:	133 dB.
Frequency response:	40 - 20.000Hz.
Coverage (H x V):	80º x 50º
Bass Loudspeakers:	15P1000ND
Compression Driver:	CP-755/TI
Constant Directivity Horn:	TD-385
Crossover:	External
Hardware:	External

Base

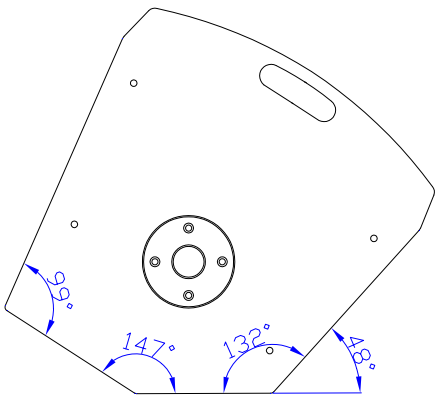

Front

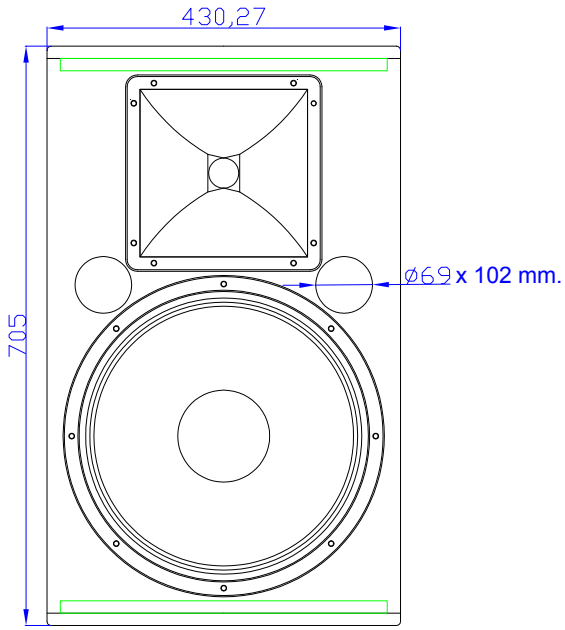

Lateral

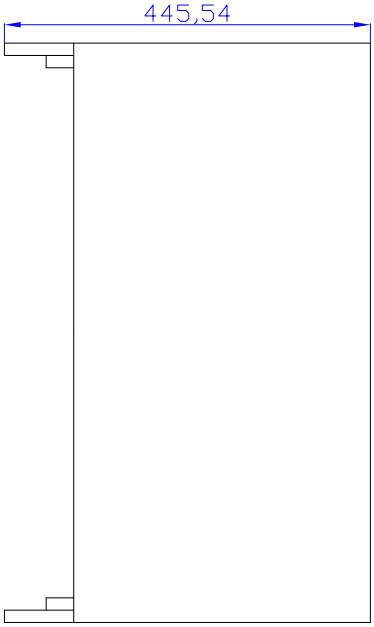

FR15B/1 CAD

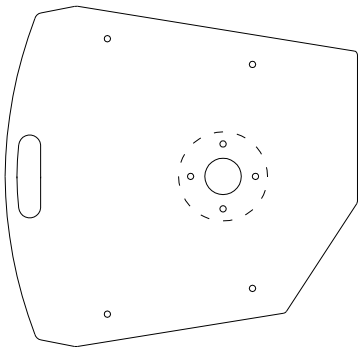

Rear

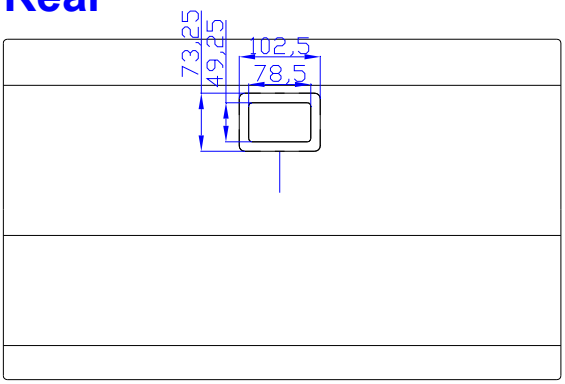

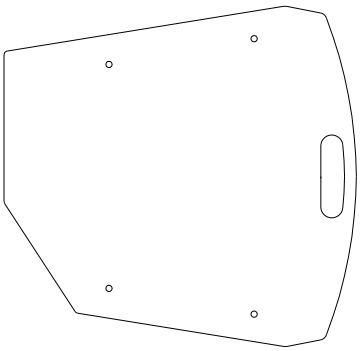

Base

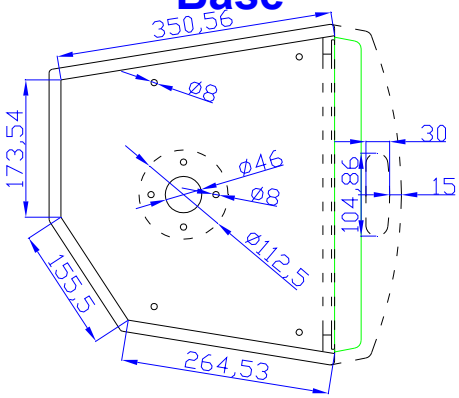

Front

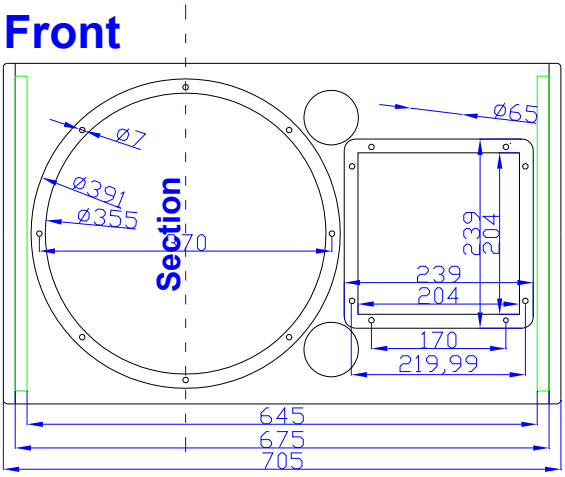

Cenital

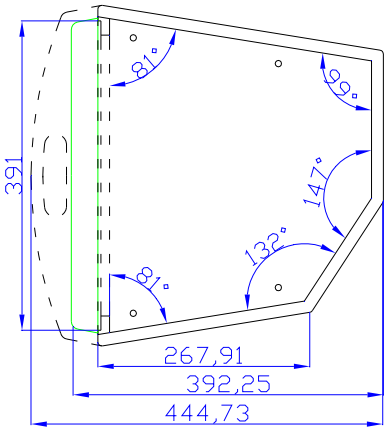

Base

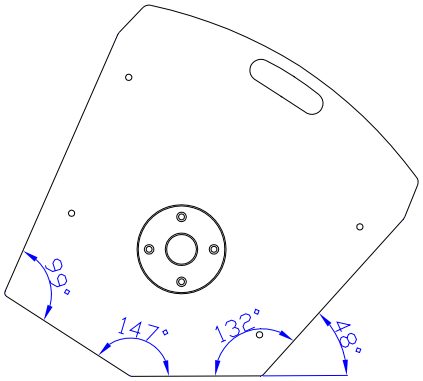

Front

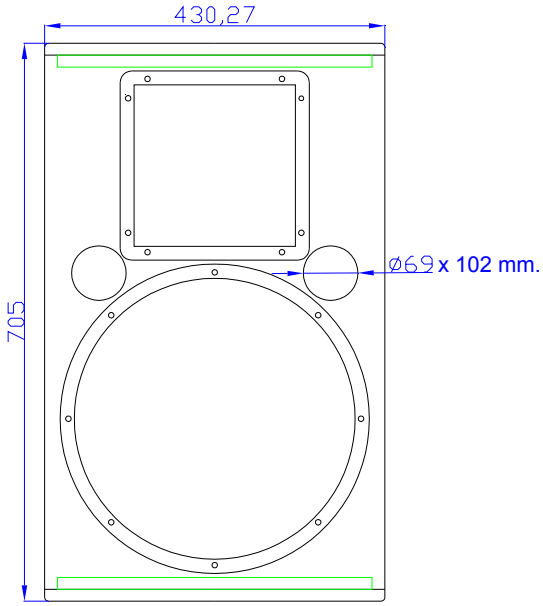

Lateral

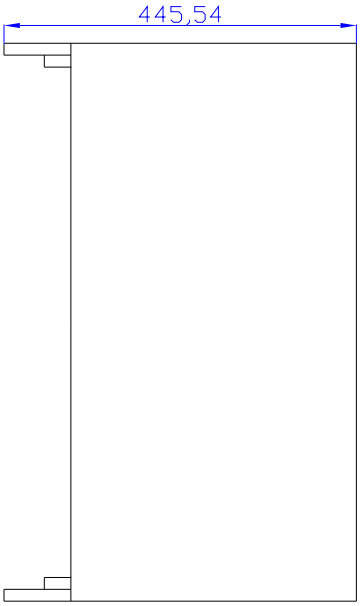

15P1000Nd

KEY FEATURES

- Real 1000 W AES power handling
- Sensitivity: 97 dB @ 2.83V
- 4” Duo Technology voice coil
- Forced air convection circuit for low power compression
- Extended controlled displacement: Xmax ± 8 mm.
- Massive mechanical displacement capability: 52 mm p-p

TECHNICAL SPECIFICATIONS

• Nominal diameter	380 mm. 15 in.
• Rated impedance	8 ohms
• Minimum impedance	6.3 ohms
• Power capacity*	1000 w AES
• Program power	2000 w
• Sensitivity	97 dB 2.83v @ 1m @ 2π
• Frequency range	30 - 2000 Hz
• Voice coil diameter	100 mm. 4 in.
• Magnetic assembly weight	4.62 kg. 10.16 lb.
• BL factor	24.3 N / A
• Voice coil length	21 mm
• Air gap height	12 mm
• X damage (peak to peak)	52 mm

Notes:
*The power capacity is determined according to AES2-1984 (r2003) standard.
Program power is defined as the transducer's ability to handle normal music program material.

DIMENSION DRAWINGS

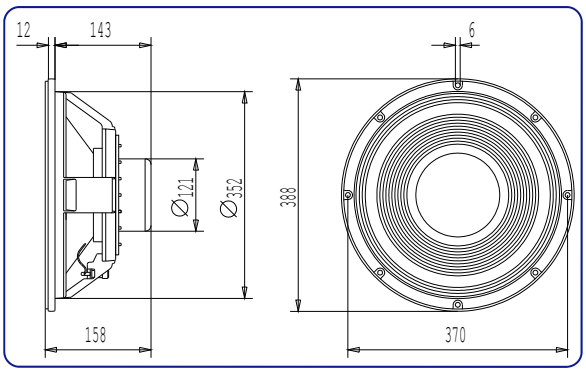

CP-755Ti

KEY FEATURES

- Composite structure diaphragm (Titanium dome & Mylar surround)
- Optimized titanium phasing plug
- Superior high frequencies sound reproduction quality
- Extended frequency response (0.6 - 20 kHz)
- High sensitivity (110 dB)

TECHNICAL SPECIFICATIONS

• Throat diameter	3.6 mm. 1.4”
• Rated impedance	8 ohms
• D.C. Resistance	5.5 ohms
• Power capacity*	90 w AES above 1 kHz
• Program power	180 w above 1 kHz
• Sensitivity**	110 dB 1w @ 1m
• Frequency range	600- 20000 Hz
• Voice coil diameter	72.2 mm. 2.87 in.
• Recommended Crossover	800 Hz or higher (12 dB/oct. min.)
• Net weight	6.75 kg. 14.85 lb.

DIMENSION DRAWINGS

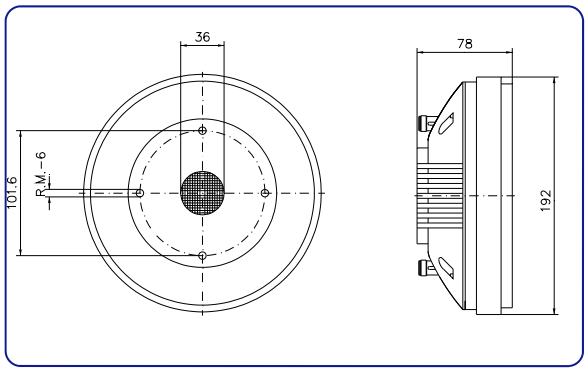

TD-385

KEY FEATURES

- Designed for compression drivers with 1.4” throat diameter
- It provides uniform response, on and off-axis with a neutral and natural frequency reproduction
- Coverage angles of 80º in the horizontal plane and 50º in the vertical plane
- Precise directivity control in the pass band
- Its square form provides more versatility when mounting in the enclosure

TECHNICAL SPECIFICATIONS

• Throat diameter	36 mm. 1.4 in.
• Horizontal beamwidth	80º (+16º, -32º) (-6 dB, 1 - 20 kHz)
• Vertical beamwidth	50º (+29º , -14º) (-6 dB, 1.6 - 20 kHz)
• Directivity factor (Q)	12.4 (average 0.63 - 16 kHz)
• Directivity index (DI)	10.5 dB (+3.5 dB, -3.2 dB)
• Cutoff frequency	800 Hz
• Dimensions (WxHxD)	235x235x120 mm. 9.25x9.25x4.72 in.
• Cutout dimensions (WxH)	204x202 mm. 8.03x7.95 in.
• Net weight	1.2 kg. 2.64 lb.
• Shipping weight	1.53 kg. 3.37 lb.
• Construction	Cast aluminium. Connection of driver by four screws on a 101.6 mm. diameter bolt circle.

DIMENSION DRAWINGS

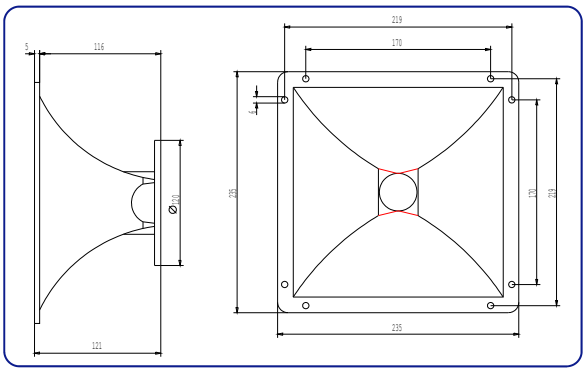

FR15B/1 Presets

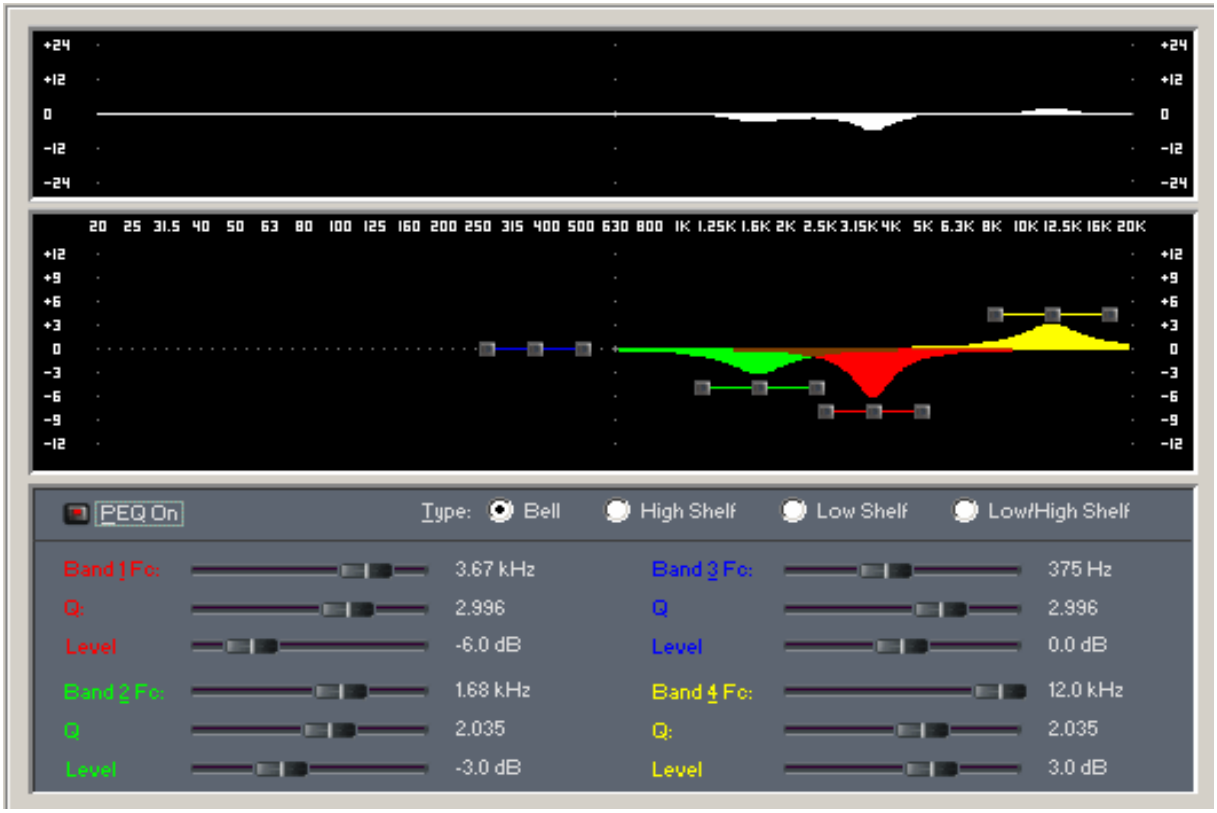

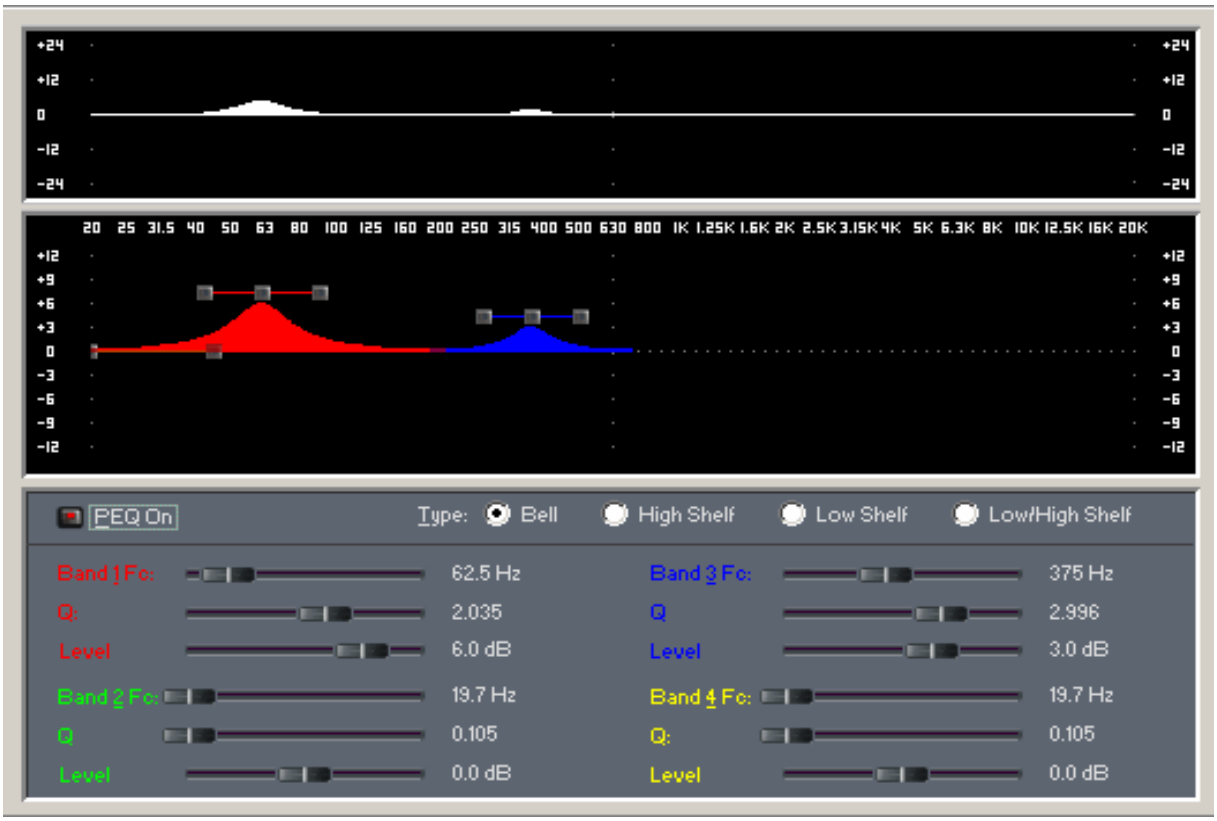

FR15B/1 Crossover

Technical Specifications

Acoustic cabinet:	FR15B
Description:	2 Way System. 15” and High Frequency unit
Power AES:	800 W.
Power Program:	1.600 W.
Sensitivity 2,83v @ 1m:	100 dB.
Max. SPL continuous:	129 dB.
Max. SPL peak:	135 dB.
Frequency response:	45 - 20.000Hz.
Coverage (H x V):	80º x 50º
Bass Loudspeakers:	15P80ND
Compression Driver:	CP-755TI
Constant Directivity Horn:	TD-385
Crossover:	External
Hardware:	External

Base

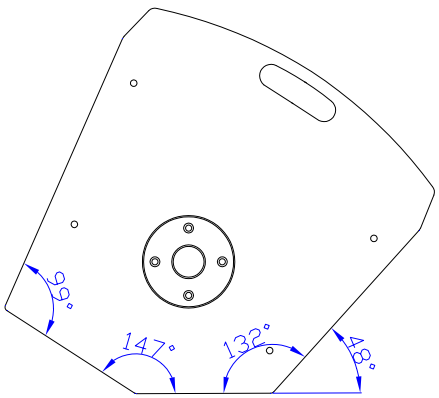

Front

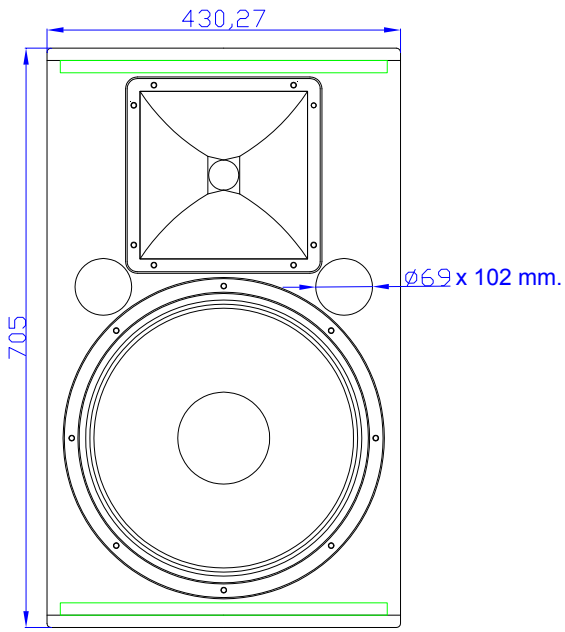

Lateral

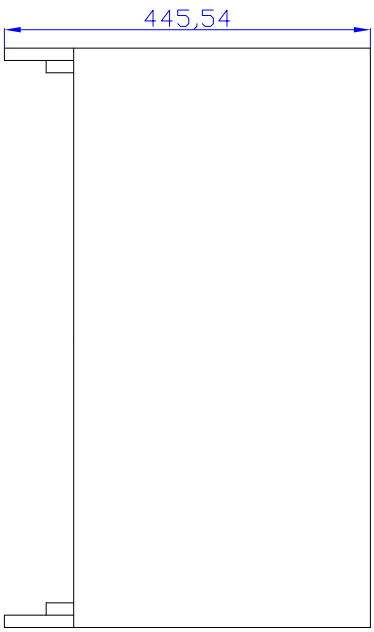

FR15B/2 CAD

Rear

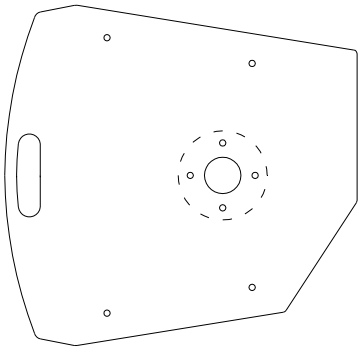

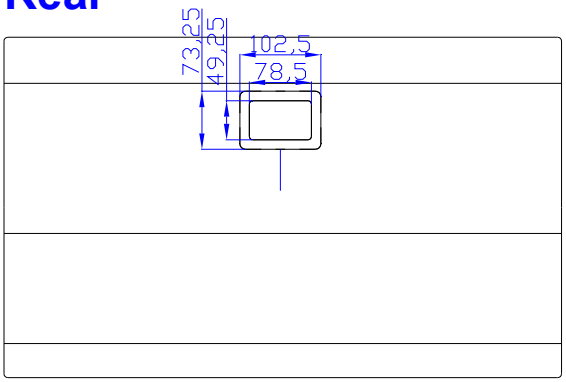

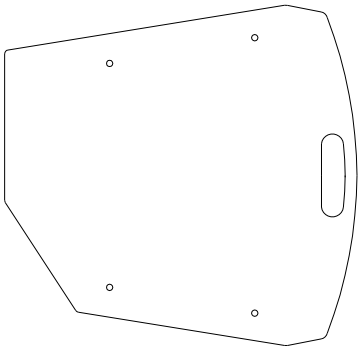

Base

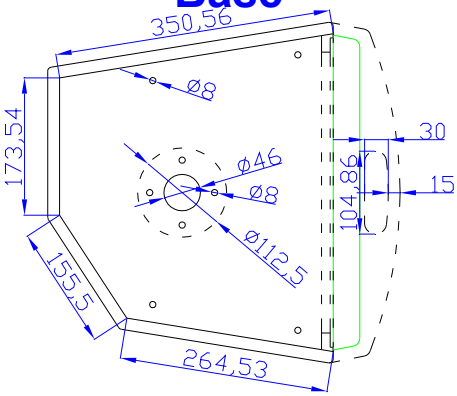

Front

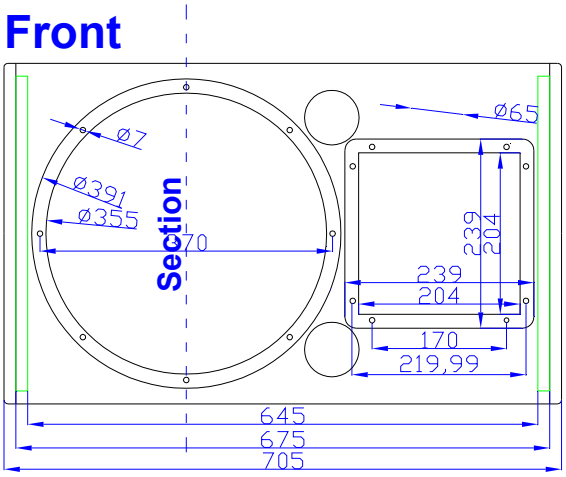

Cenital

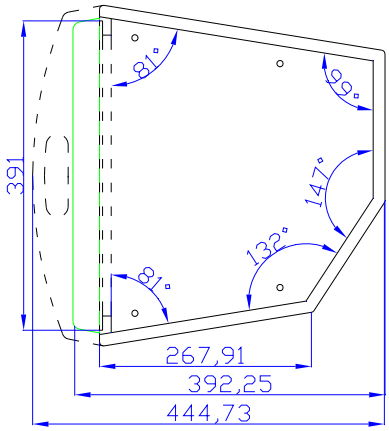

Base

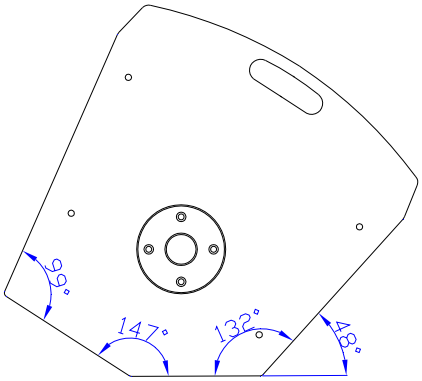

Front

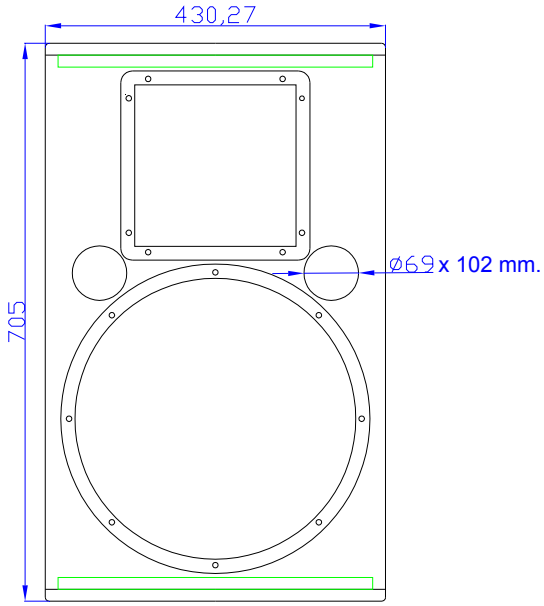

Lateral

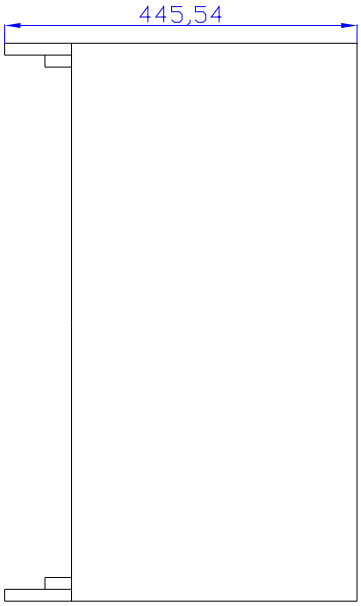

15P80Nd

KEY FEATURES

- Real 800 W AES power handling
- Sensitivity: 100 dB @ 2.83V
- 4” Duo Technology voice coil
- Forced air convection circuit for low power compression
- Extended controlled displacement: Xmax ± 7.5 mm.
- Massive mechanical displacement capability: 52 mm p-p

TECHNICAL SPECIFICATIONS

• Nominal diameter	380 mm. 15 in.
• Rated impedance	8 ohms
• Minimum impedance	6.6 ohms
• Power capacity*	800 w AES
• Program power	1600 w
• Sensitivity	100 dB 2.83v @ 1m @ 2π
• Frequency range	30 - 5000 Hz
• Voice coil diameter	100 mm. 4 in.
• Magnetic assembly weight	4.62 kg. 10.16 lb.
• BL factor	23.6 N / A
• Voice coil length	20 mm
• Air gap height	12 mm
• X damage (peak to peak)	52 mm

Notes:
*The power capacity is determined according to AES2-1984 (r2003) standard.
Program power is defined as the transducer's ability to handle normal music program material.

DIMENSION DRAWINGS

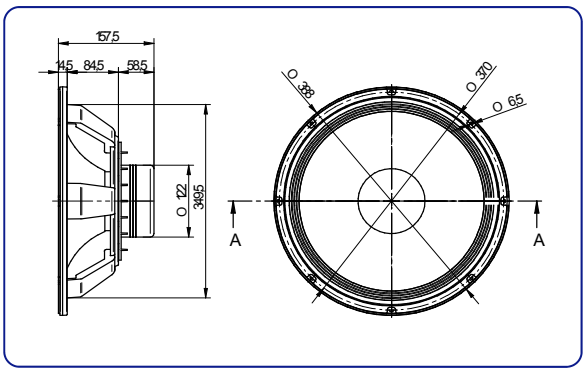

CP-755Ti

KEY FEATURES

- Composite structure diaphragm (Titanium dome & Mylar surround)
- Optimized titanium phasing plug
- Superior high frequencies sound reproduction quality
- Extended frequency response (0.6 - 20 kHz)
- High sensitivity (110 dB)

TECHNICAL SPECIFICATIONS

• Throat diameter	3.6 mm. 1.4”
• Rated impedance	8 ohms
• D.C. Resistance	5.5 ohms
• Power capacity*	90 w AES above 1 kHz
• Program power	180 w above 1 kHz
• Sensitivity**	110 dB 1w @ 1m
• Frequency range	600- 20000 Hz
• Voice coil diameter	72.2 mm. 2.87 in.
• Recommended Crossover	800 Hz or higher (12 dB/oct. min.)
• Net weight	6.75 kg. 14.85 lb.

Notes:
*The power capacity is determined according to AES2-1984 (r2003) standard.
Program power is defined as the transducer's ability to handle normal music program material.
**Sensitivity was measured at 1 m distance, on axis, with 1 w input, averaged in the range 1 - 7 kHz and Coupled to a TD565 horn.

DIMENSION DRAWINGS

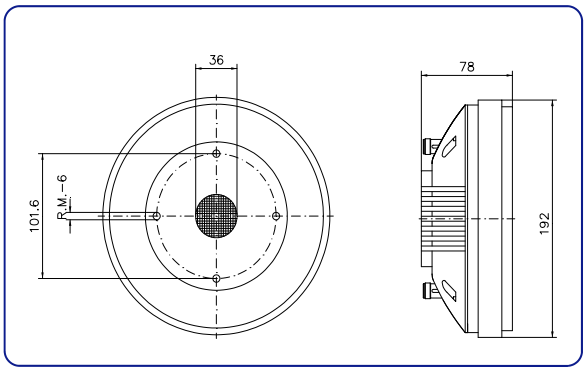

TD-385

KEY FEATURES

- Designed for compression drivers with 1.4” throat diameter
- It provides uniform response, on and off-axis with a neutral and natural frequency reproduction
- Coverage angles of 80º in the horizontal plane and 50º in the vertical plane
- Precise directivity control in the pass band
- Its square form provides more versatility when mounting in the enclosure

TECHNICAL SPECIFICATIONS

• Throat diameter	36 mm. 1.4 in.
• Horizontal beamwidth	80º (+16º, -32º) (-6 dB, 1 - 20 kHz)
• Vertical beamwidth	50º (+29º , -14º) (-6 dB, 1.6 - 20 kHz)
• Directivity factor (Q)	12.4 (average 0.63 - 16 kHz)
• Directivity index (DI)	10.5 dB (+3.5 dB, -3.2 dB)
• Cutoff frequency	800 Hz
• Dimensions (WxHxD)	235x235x120 mm. 9.25x9.25x4.72 in.
• Cutout dimensions (WxH)	204x202 mm. 8.03x7.95 in.
• Net weight	1.2 kg. 2.64 lb.
• Shipping weight	1.53 kg. 3.37 lb.
• Construction	Cast aluminium. Connection of driver by four screws on a 101.6 mm. diameter bolt circle.

DIMENSION DRAWINGS

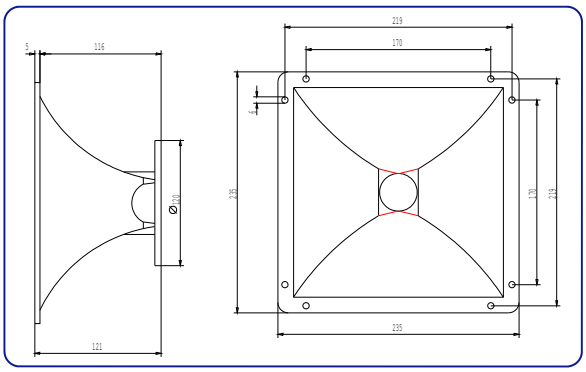

FR15B/2 Presets

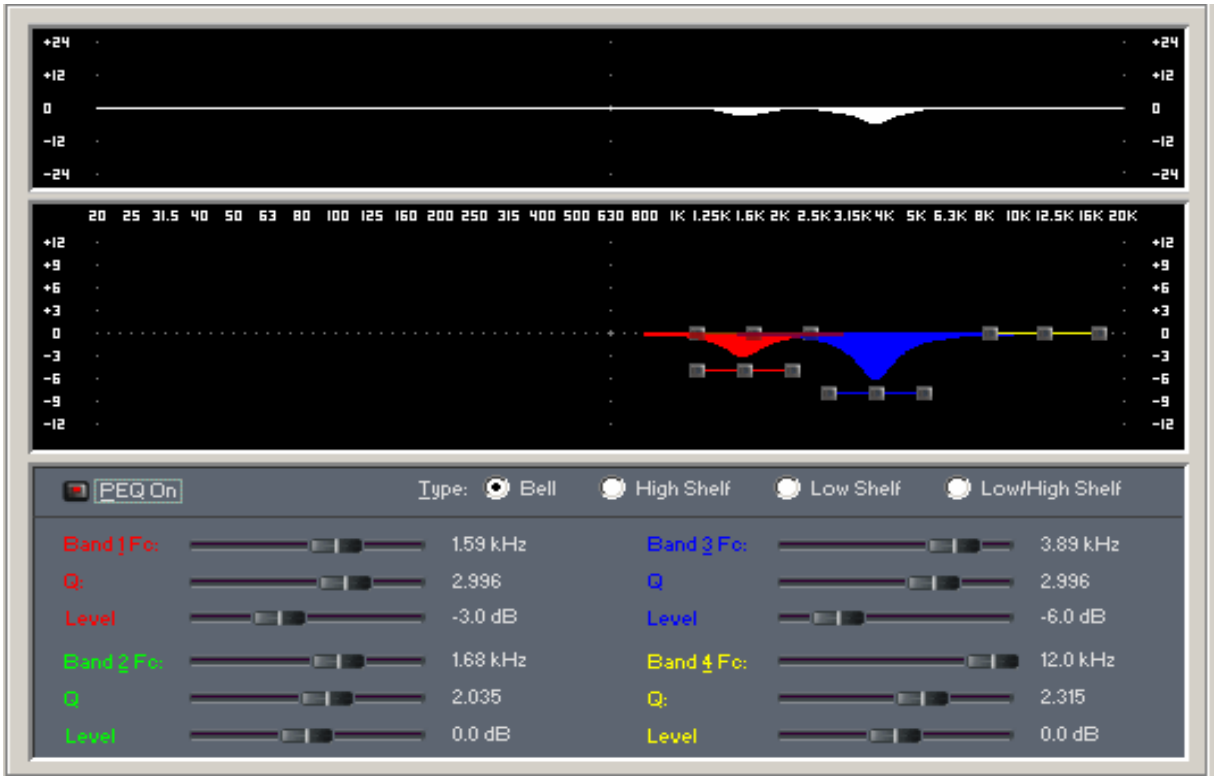

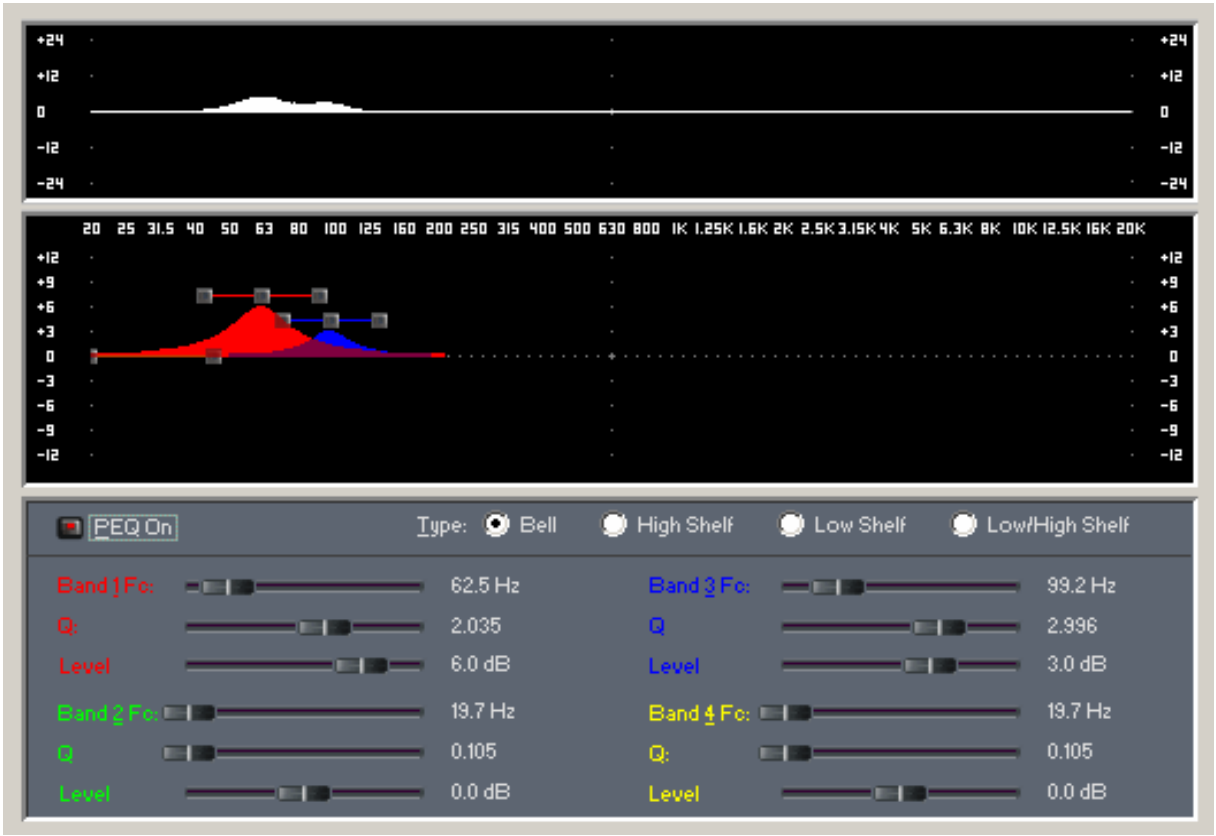

FR15B/2 Crossover

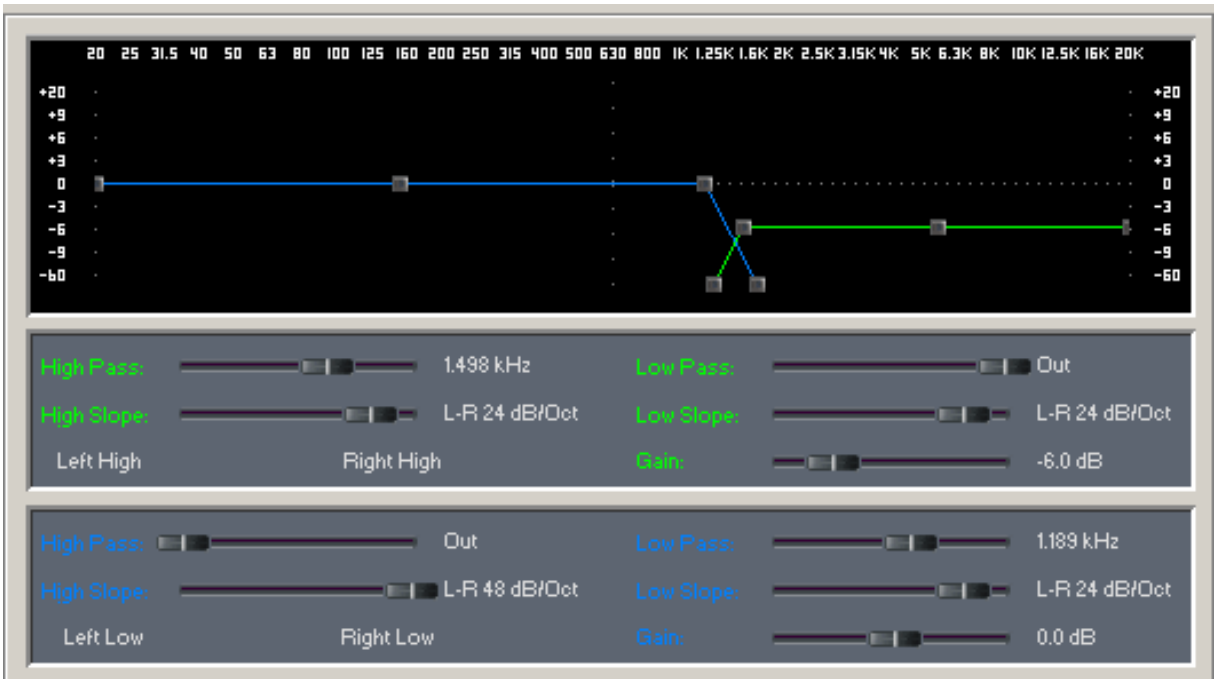

Technical Specifications

Acoustic cabinet:	FR15B
Description:	2 Way System. 15” and High Frequency unit
Power AES:	400 W.
Power Program:	800 W.
Sensitivity 2,83v @ 1m:	99 dB.
Max. SPL continuous:	125 dB.
Max. SPL peak:	131 dB.
Frequency response:	43 - 20.000Hz.
Coverage (H x V):	80º x 50º
Bass Loudspeakers:	15MW/ND
Compression Driver:	SMC65/ND
Constant Directivity Horn:	TD-385
Crossover:	FP-15B/3
Hardware:	External

Base

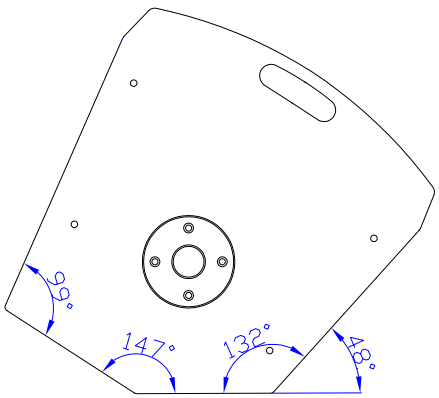

Front

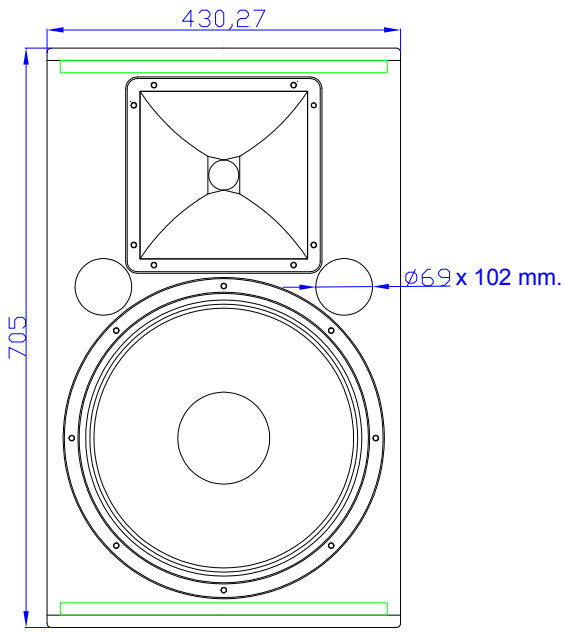

Lateral

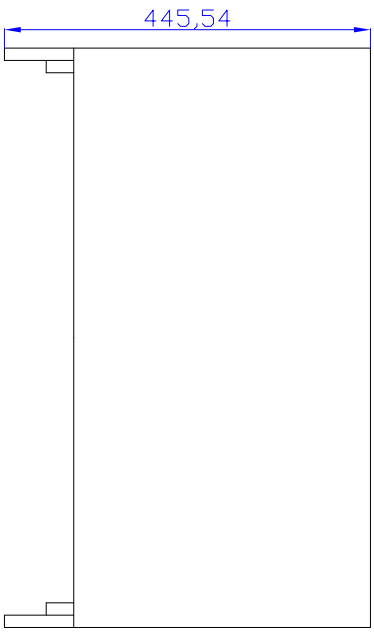

FR15B/3 CAD

Rear

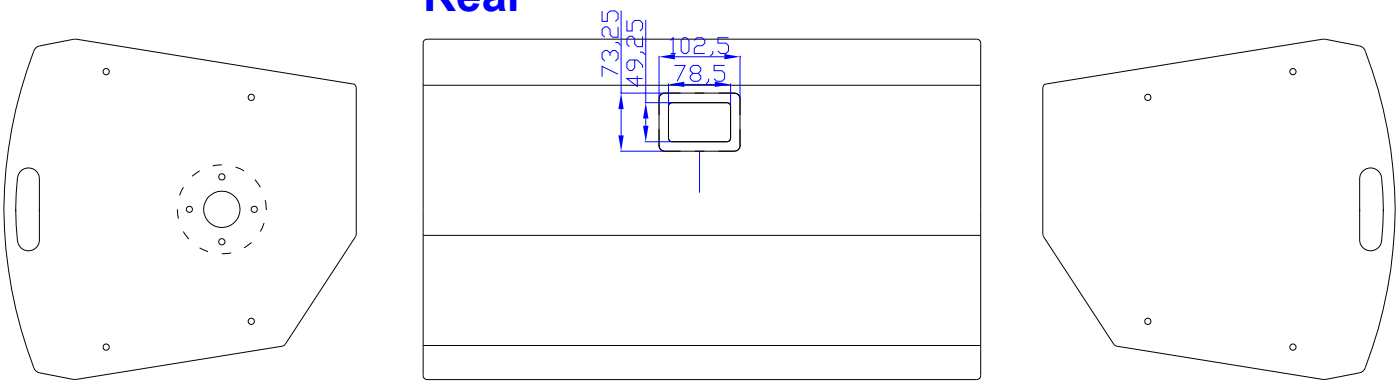

Base

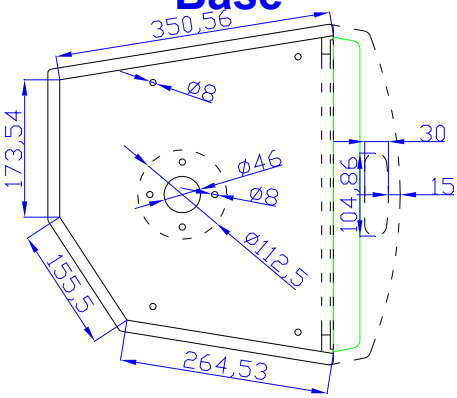

Front

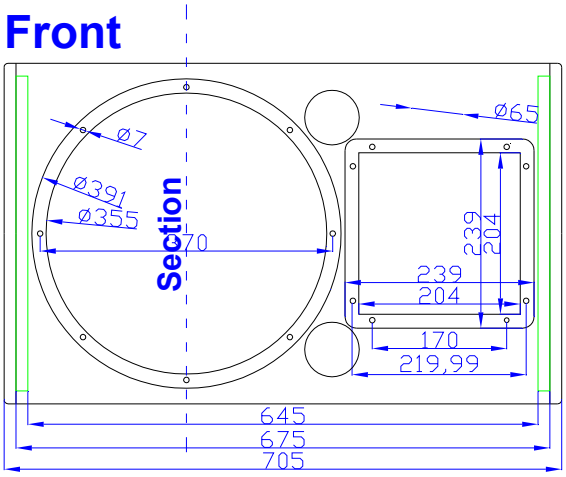

Cenital

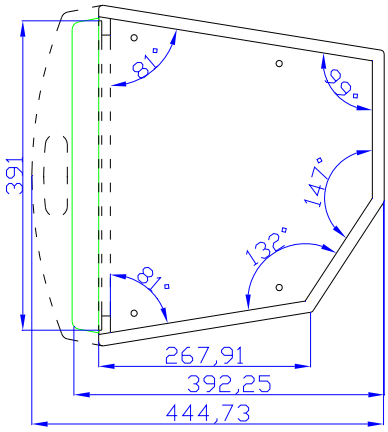

Base

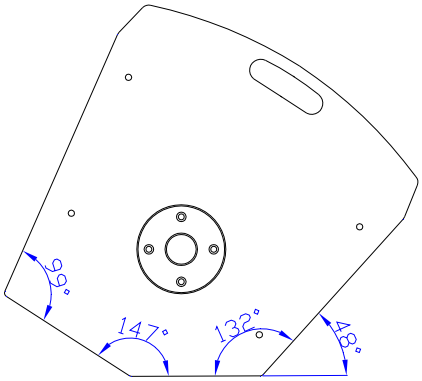

Front

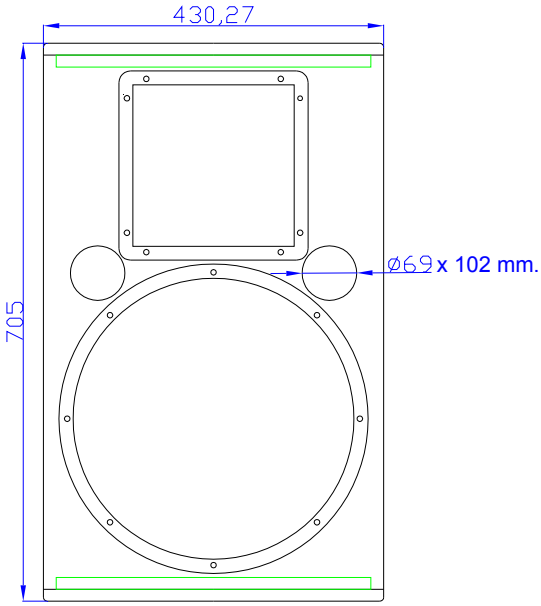

Lateral

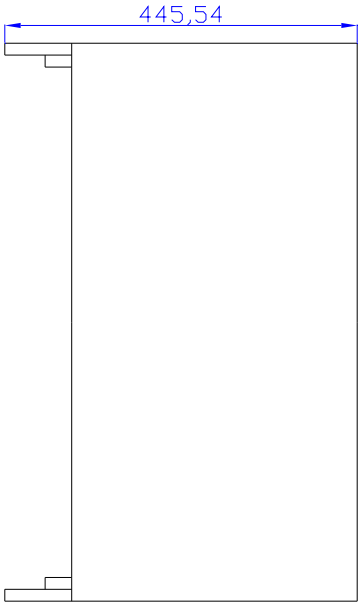

15MWNd

KEY FEATURES

- Good power handling (400 W AES)
- Excelent sensitivity (99 dB)
- Extended frequency response (30 - 3500 Hz)
- Neodymium magnet system
- Aluminium customized basket

TECHNICAL SPECIFICATIONS

• Nominal diameter	380 mm. 15 in.
• Rated impedance	8 ohms
• Minimum impedance	5.8 ohms
• Power capacity*	400 w AES
• Program power	800 w
• Sensitivity	99 dB 2.83v @ 1m @ 2π
• Frequency range	30 - 3500 Hz
• Voice coil diameter	62.4 mm. 2.5 in.
• Magnetic assembly weight	2.54 kg. 5.59 lb.
• BL factor	17.2 N / A
• Voice coil length	17.5 mm
• Air gap height	10 mm
• X damage (peak to peak)	27.5 mm

Notes:
*The power capacity is determined according to AES2-1984 (r2003) standard.
Program power is defined as the transducer's ability to handle normal music program material.

DIMENSION DRAWINGS

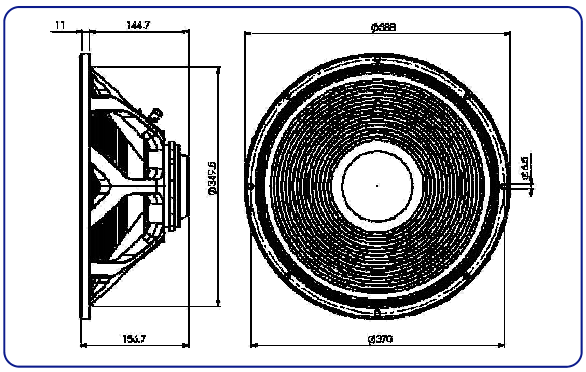

SMC65Nd

KEY FEATURES

- Composite structure diaphragm (Titanium dome & Mylar surround)
- 3” edgewound aluminium ribbon voice coil
- Excelent high frequencies sound reproduction quality
- Extended frequency response (0.6 - 20 kHz)
- Low weight Neodymium magnet
- High sensitivity (108 dB)

TECHNICAL SPECIFICATIONS

• Throat diameter	3.6 mm. 1.4”
• Rated impedance	8 ohms
• D.C. Resistance	5.5 ohms
• Power capacity*	70 w AES above 1 kHz
• Program power	140 w above 1 kHz
• Sensitivity**	108 dB 1w @ 1m
• Frequency range	600- 20000 Hz
• Voice coil diameter	72.2 mm. 2.87 in.
• Recommended Crossover	800 Hz or higher (12 dB/oct. min.)
• Net weight	2.2 kg. 4.84 lb.

Notes:
*The power capacity is determined according to AES2-1984 (r2003) standard.
Program power is defined as the transducer's ability to handle normal music program material.
**Sensitivity was measured at 1 m distance, on axis, with 1 w input, averaged in the range 1 - 7 kHz and Coupled to a TD385 horn.

DIMENSION DRAWINGS

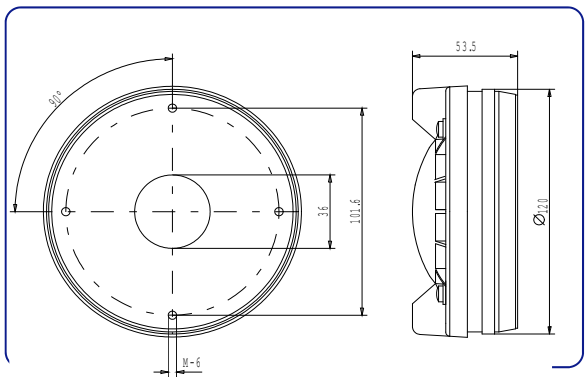

TD-385

KEY FEATURES

- Designed for compression drivers with 1.4” throat diameter
- It provides uniform response, on and off-axis with a neutral and natural frequency reproduction
- Coverage angles of 80º in the horizontal plane and 50º in the vertical plane
- Precise directivity control in the pass band
- Its square form provides more versatility when mounting in the enclosure

TECHNICAL SPECIFICATIONS

• Throat diameter	36 mm. 1.4 in.
• Horizontal beamwidth	80º (+16º, -32º) (-6 dB, 1 - 20 kHz)
• Vertical beamwidth	50º (+29º , -14º) (-6 dB, 1.6 - 20 kHz)
• Directivity factor (Q)	12.4 (average 0.63 - 16 kHz)
• Directivity index (DI)	10.5 dB (+3.5 dB, -3.2 dB)
• Cutoff frequency	800 Hz
• Dimensions (WxHxD)	235x235x120 mm. 9.25x9.25x4.72 in.
• Cutout dimensions (WxH)	204x202 mm. 8.03x7.95 in.
• Net weight	1.2 kg. 2.64 lb.
• Shipping weight	1.53 kg. 3.37 lb.
• Construction	Cast aluminium. Connection of driver by four screws on a 101.6 mm. diameter bolt circle.

DIMENSION DRAWINGS

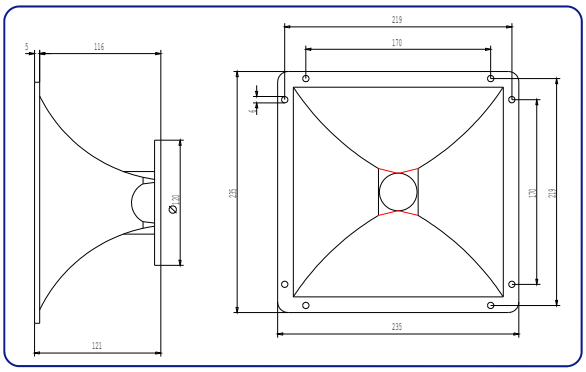

FR15B/3 Presets

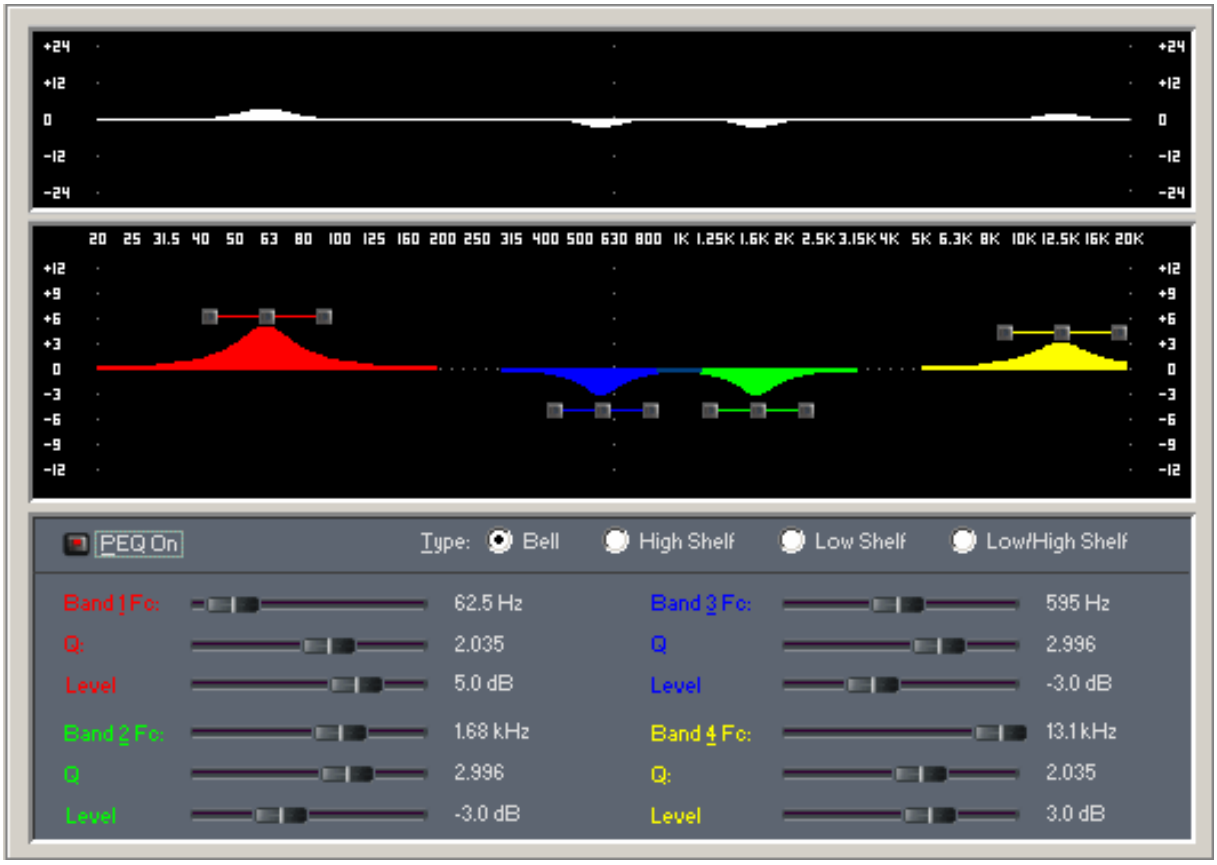

FR15B/3 Crossover

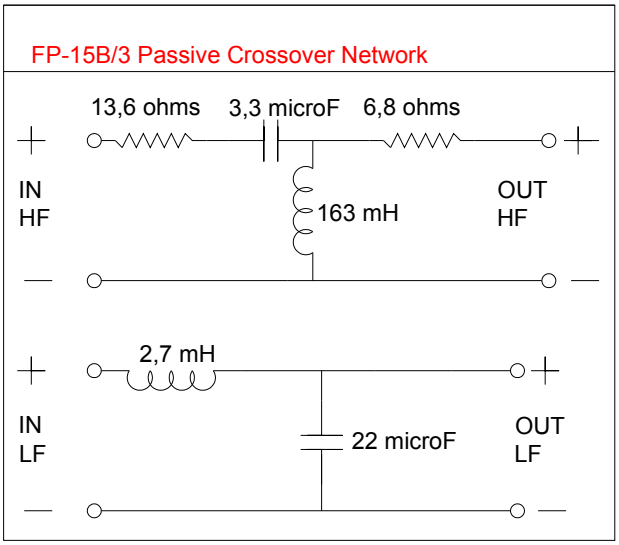

Technical Specifications

Acoustic cabinet:	FR15B
Description:	2 Way System. 15” and High Frequency unit
Power AES:	700 W.
Power Program:	1.400 W.
Sensitivity 2,83v @ 1m:	97 dB.
Max. SPL continuous:	125 dB.
Max. SPL peak:	131 dB.
Frequency response:	43 - 20.000Hz.
Coverage (H x V):	80º x 50º
Bass Loudspeakers:	15G40
Compression Driver:	SMC65/ND
Constant Directivity Horn:	TD-385
Crossover:	FP-15B/ 4
Hardware:	External

Base

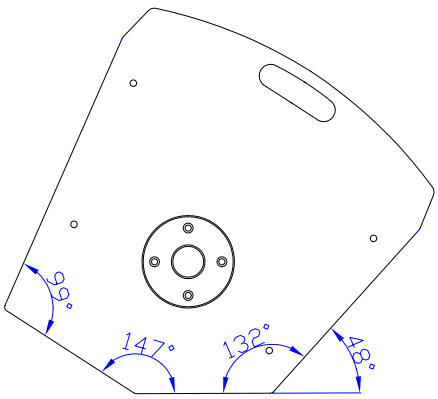

Front

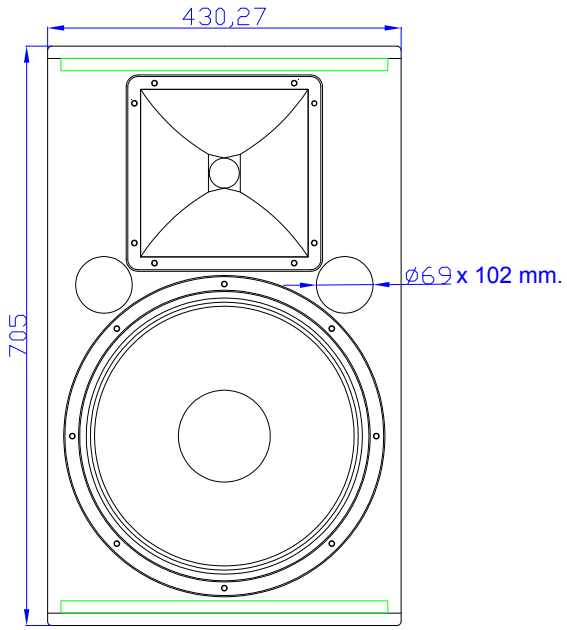

Lateral

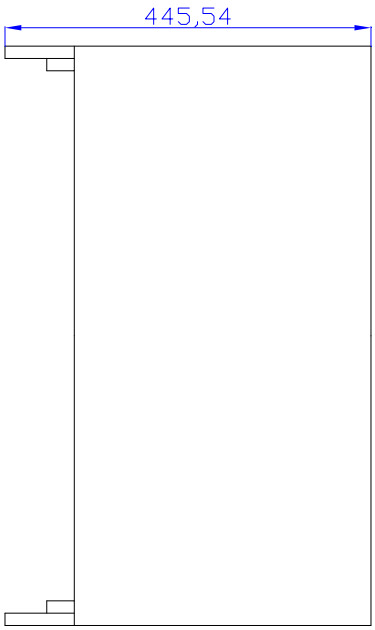

FR15B/4 CAD

Rear

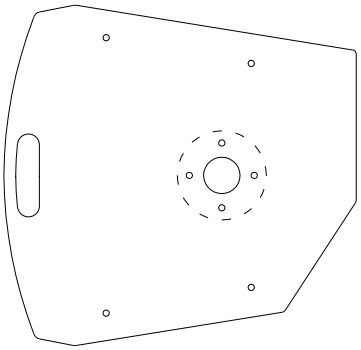

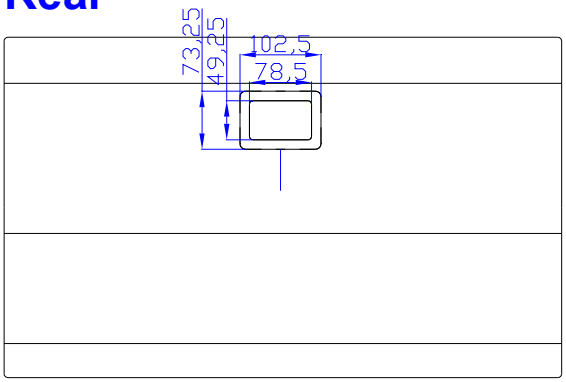

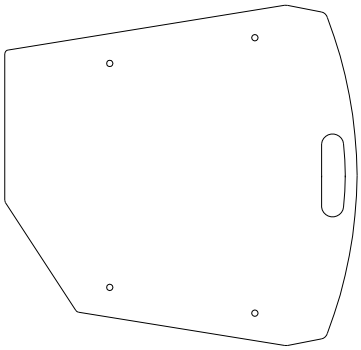

Base

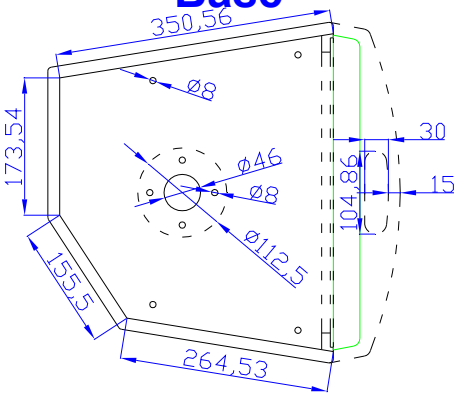

Front

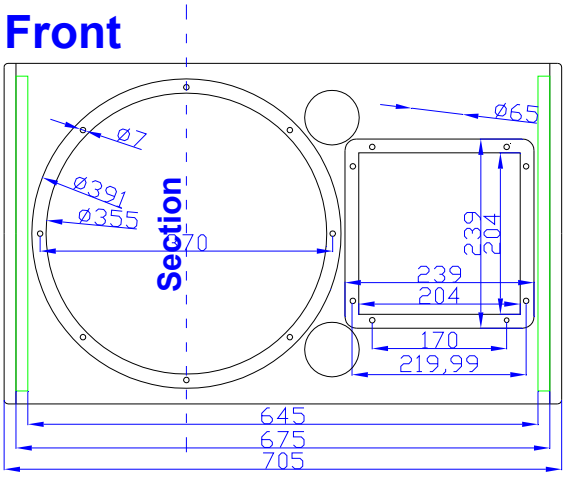

Cenital

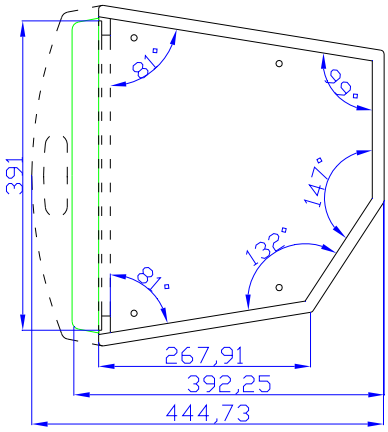

Base

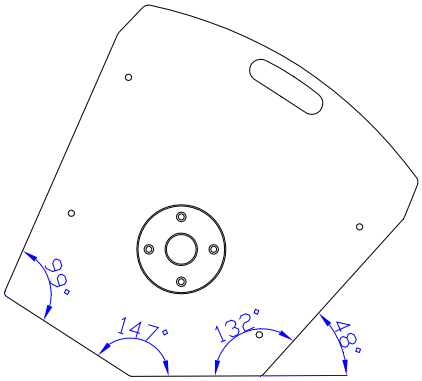

Front

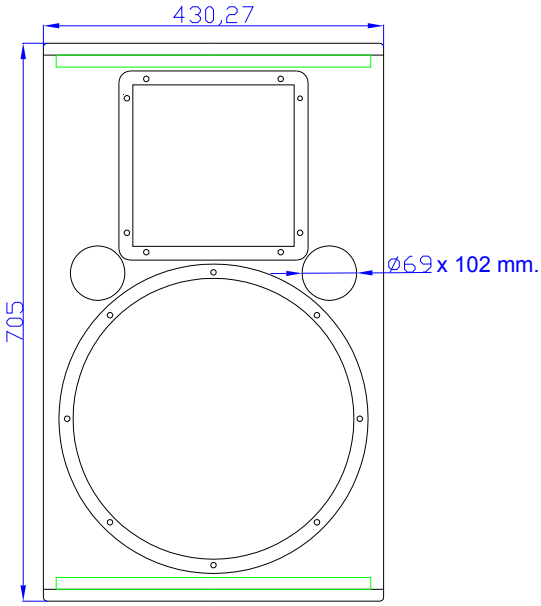

Lateral

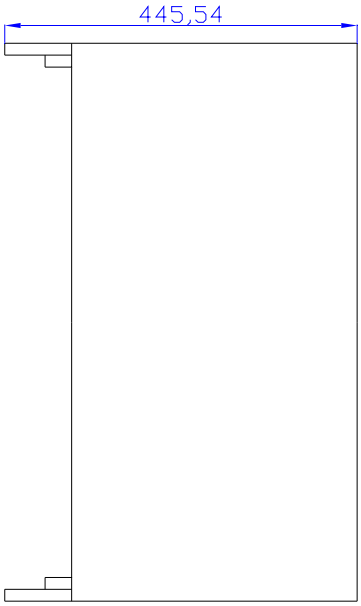

15G40

KEY FEATURES

- High power handling (700 W AES)
- Waterproof paper cone
- 4” edgewound copper voice coil with polyimide fiber glass former
- Optimum winding length for increased linear excursion
- Spiders of improved temperature behaviour, retaining good mechanical properties at high power

TECHNICAL SPECIFICATIONS

• Nominal diameter	380 mm. 15 in.
• Rated impedance	8 ohms
• Minimum impedance	7 ohms
• Power capacity*	700 w AES
• Program power	1400 w
• Sensitivity	97 dB 2.83v @ 1m @ 2π
• Frequency range	25 - 1500 Hz
• Voice coil diameter	100 mm. 4 in.
• Magnetic assembly weight	9 kg. 19.8 lb.
• BL factor	23 N / A
• Voice coil length	23 mm
• Air gap height	9.5 mm
• X damage (peak to peak)	33 mm

Notes:
*The power capacity is determined according to AES2-1984 (r2003) standard.
Program power is defined as the transducer's ability to handle normal music program material.

DIMENSION DRAWINGS

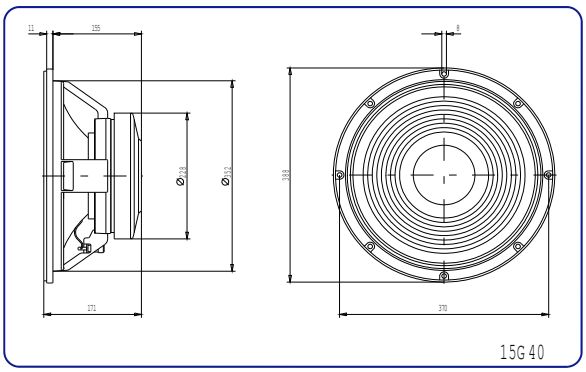

SMC65Nd

KEY FEATURES

- Composite structure diaphragm (Titanium dome & Mylar surround)
- 3” edgewound aluminium ribbon voice coil
- Excelent high frequencies sound reproduction quality
- Extended frequency response (0.6 - 20 kHz)
- Low weight Neodymium magnet
- High sensitivity (108 dB)

TECHNICAL SPECIFICATIONS

• Throat diameter	3.6 mm. 1.4”
• Rated impedance	8 ohms
• D.C. Resistance	5.5 ohms
• Power capacity*	70 w AES above 1 kHz
• Program power	140 w above 1 kHz
• Sensitivity**	108 dB 1w @ 1m
• Frequency range	600- 20000 Hz
• Voice coil diameter	72.2 mm. 2.87 in.
• Recommended Crossover	800 Hz or higher (12 dB/oct. min.)
• Net weight	2.2 kg. 4.84 lb.

*The power capacity is determined according to AES2-1984 (r2003) standard.
Program power is defined as the transducer's ability to handle normal music program material.
**Sensitivity was measured at 1 m distance, on axis, with 1 w input, averaged in the range 1 - 7 kHz and Coupled to a TD385 horn.

DIMENSION DRAWINGS

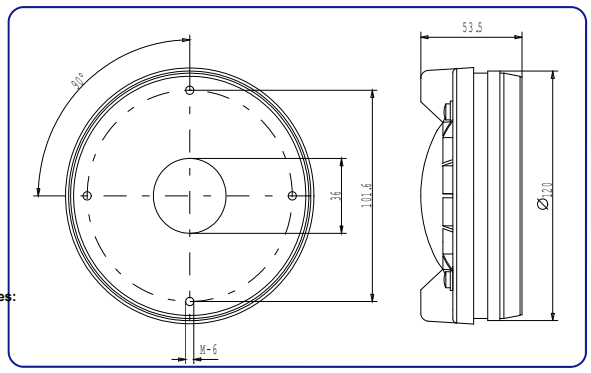

Notes:

TD-385

KEY FEATURES

- Designed for compression drivers with 1.4” throat diameter
- It provides uniform response, on and off-axis with a neutral and natural frequency reproduction
- Coverage angles of 80º in the horizontal plane and 50º in the vertical plane
- Precise directivity control in the pass band
- Its square form provides more versatility when mounting in the enclosure

TECHNICAL SPECIFICATIONS

• Throat diameter	36 mm. 1.4 in.
• Horizontal beamwidth	80º (+16º, -32º) (-6 dB, 1 - 20 kHz)
• Vertical beamwidth	50º (+29º , -14º) (-6 dB, 1.6 - 20 kHz)
• Directivity factor (Q)	12.4 (average 0.63 - 16 kHz)
• Directivity index (DI)	10.5 dB (+3.5 dB, -3.2 dB)
• Cutoff frequency	800 Hz
• Dimensions (WxHxD)	235x235x120 mm. 9.25x9.25x4.72 in.
• Cutout dimensions (WxH)	204x202 mm. 8.03x7.95 in.
• Net weight	1.2 kg. 2.64 lb.
• Shipping weight	1.53 kg. 3.37 lb.
• Construction	Cast aluminium. Connection of driver by four screws on a 101.6 mm. diameter bolt circle.

DIMENSION DRAWINGS

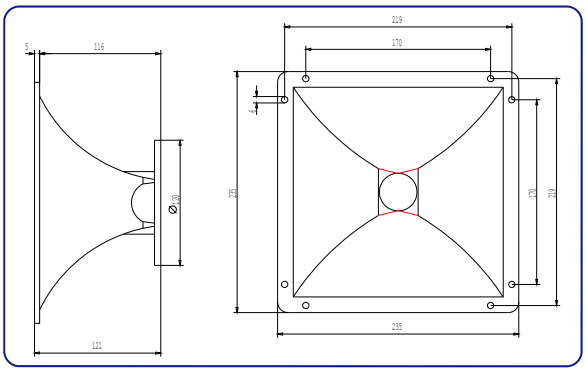

FR15B/4 Presets

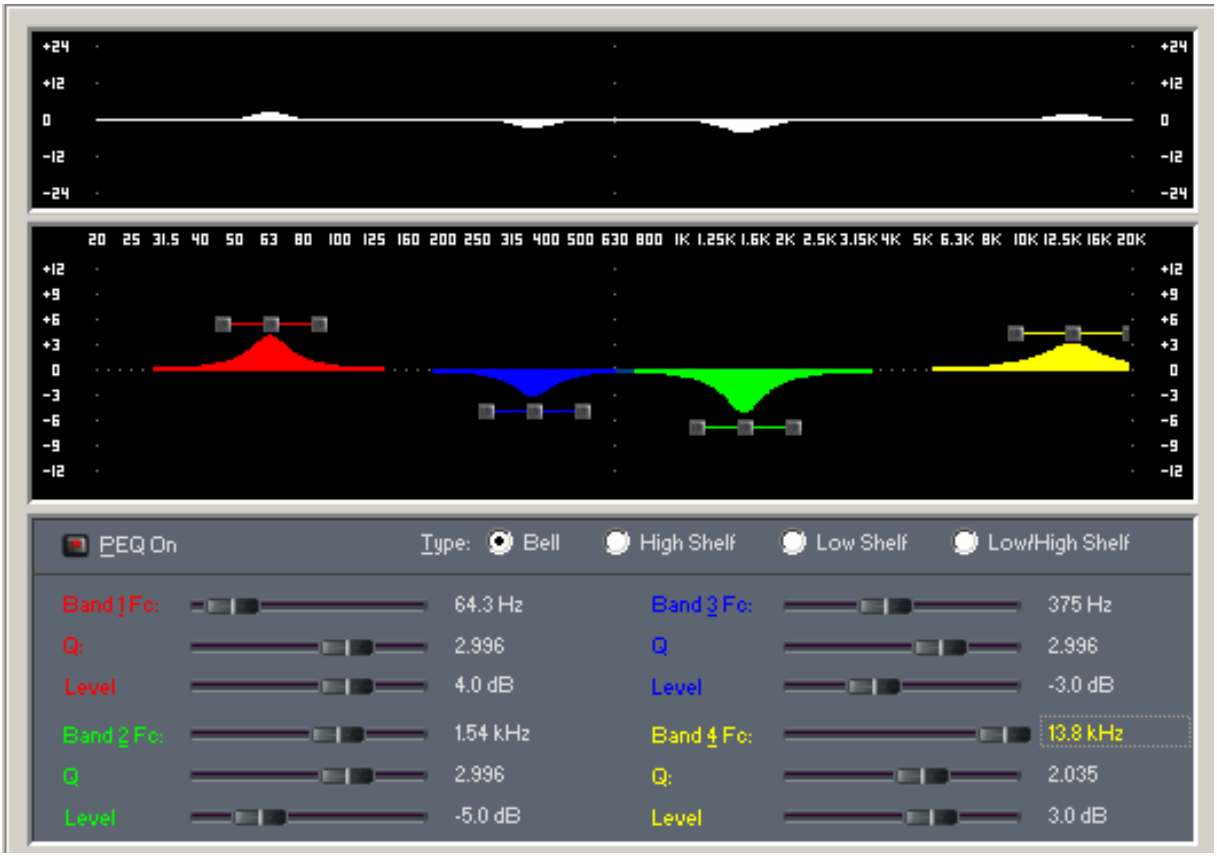

FR15B/4 Crossover

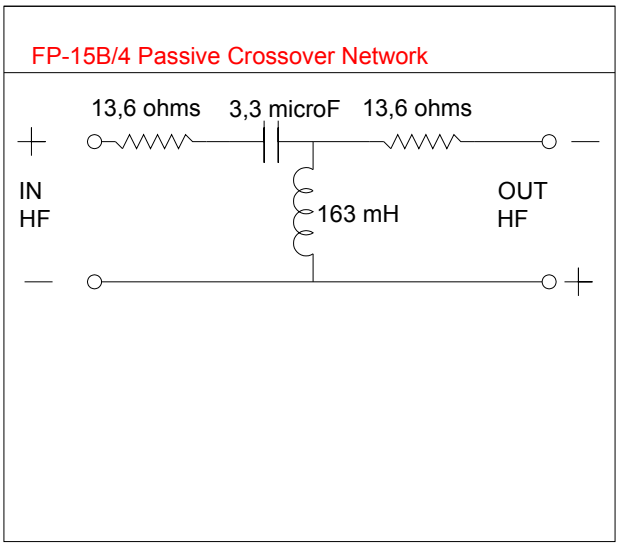

Technical Specifications

Acoustic cabinet:	SB15
Description:	Bass reinforcement. 15” Subwoofer
Power AES:	1.200 W.
Power Program:	2.400 W.
Sensitivity 2,83v @ 1m:	100 dB.
Max. SPL continuous:	131 dB.
Max. SPL peak:	137 dB.
Frequency response:	35 - 200 Hz.
Bass Loudspeakers:	15P1200ND

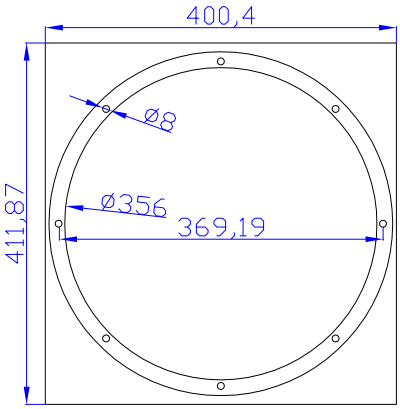

Base

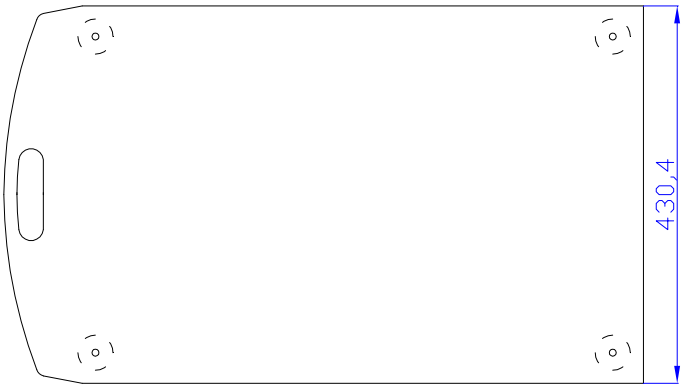

Rear

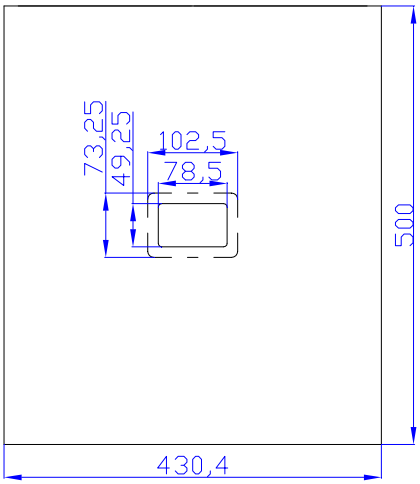

Lateral

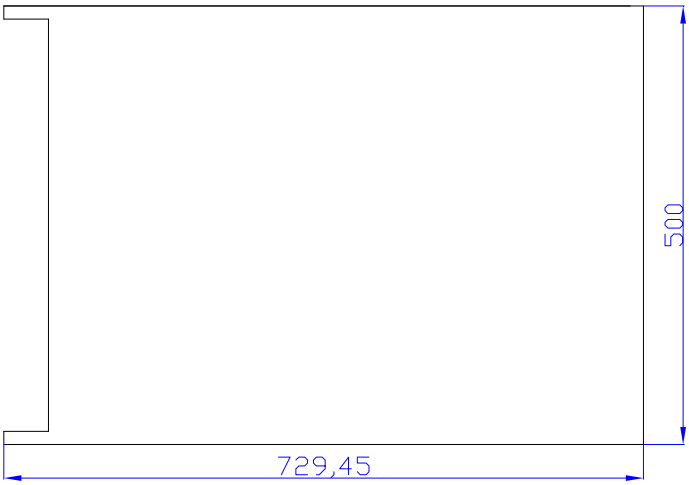

SB15/1 CAD

Front

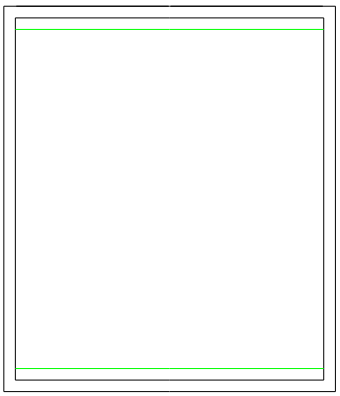

Lateral

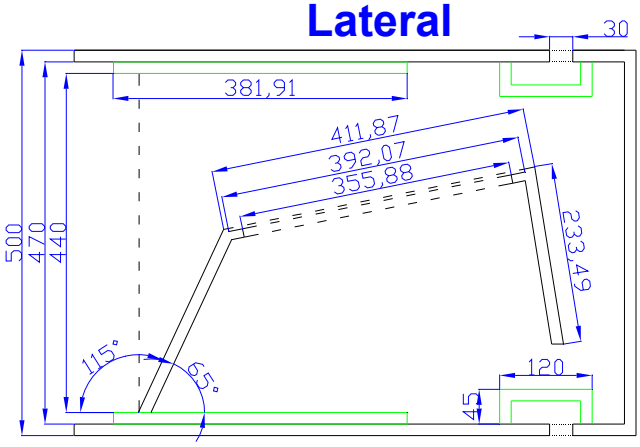

Cenital

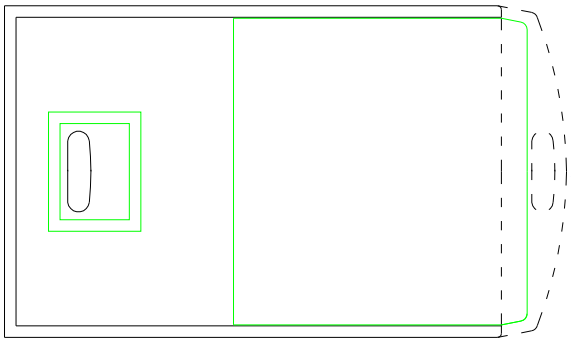

Base

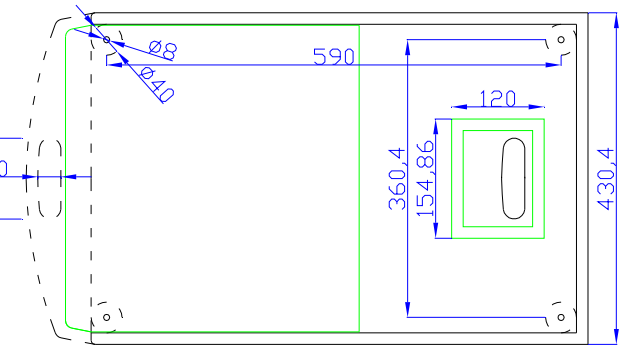

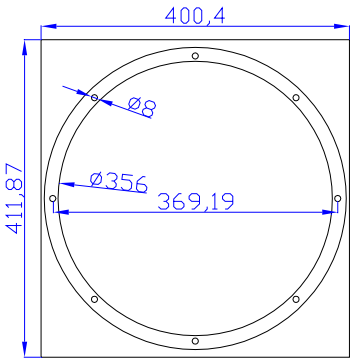

Base

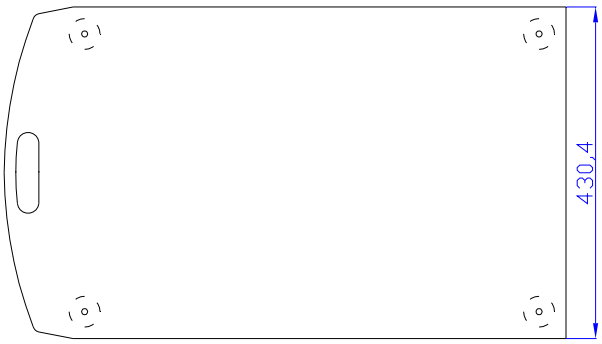

Rear

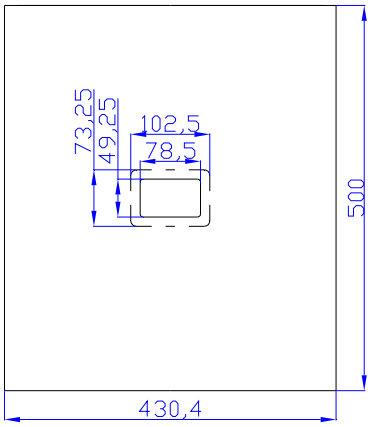

Lateral

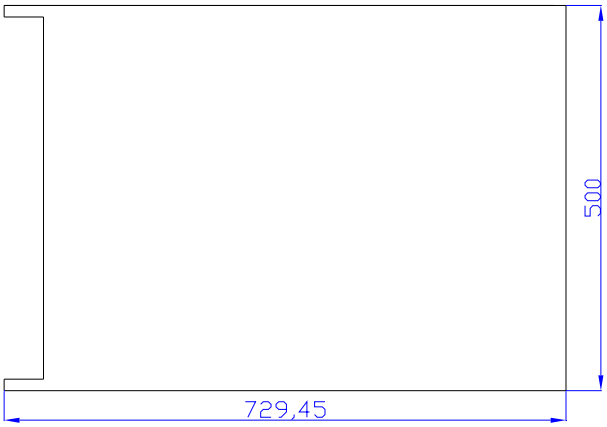

15P1200Nd

KEY FEATURES

- Real 1200 W AES power handling
- Sensitivity: 97 dB @ 2.83V
- 4” Duo Technology voice coil
- Forced air convection circuit for low power compression
- Extended controlled displacement: Xmax ± 9.5 mm.
- Massive mechanical displacement capability: 52 mm p-p

TECHNICAL SPECIFICATIONS

• Nominal diameter	380 mm. 15 in.
• Rated impedance	8 ohms
• Minimum impedance	6.1 ohms
• Power capacity*	1200 w AES
• Program power	2400 w
• Sensitivity	97 dB 2.83v @ 1m @ 2π
• Frequency range	30 - 2000 Hz
• Voice coil diameter	100 mm. 4 in.
• Magnetic assembly weight	6 kg. 13.2 lb.
• BL factor	26.3 N / A
• Voice coil length	25 mm
• Air gap height	14 mm
• X damage (peak to peak)	52 mm

Notes:
*The power capacity is determined according to AES2-1984 (r2003) standard.
Program power is defined as the transducer's ability to handle normal music program material.

DIMENSION DRAWINGS

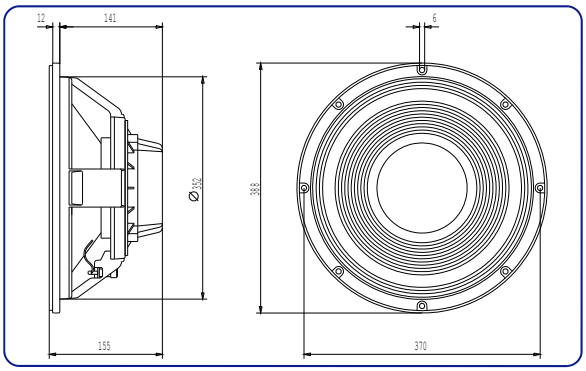

SB15/1 Presets

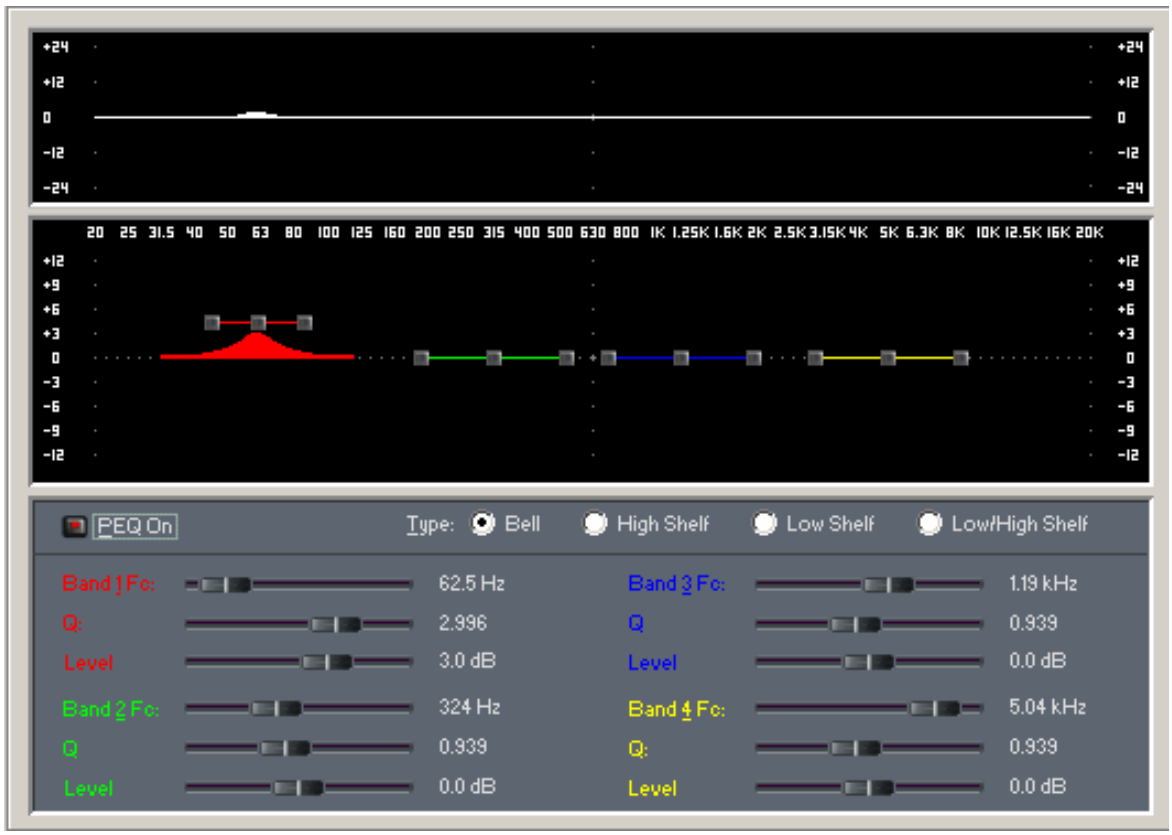

SB15/1 Crossover

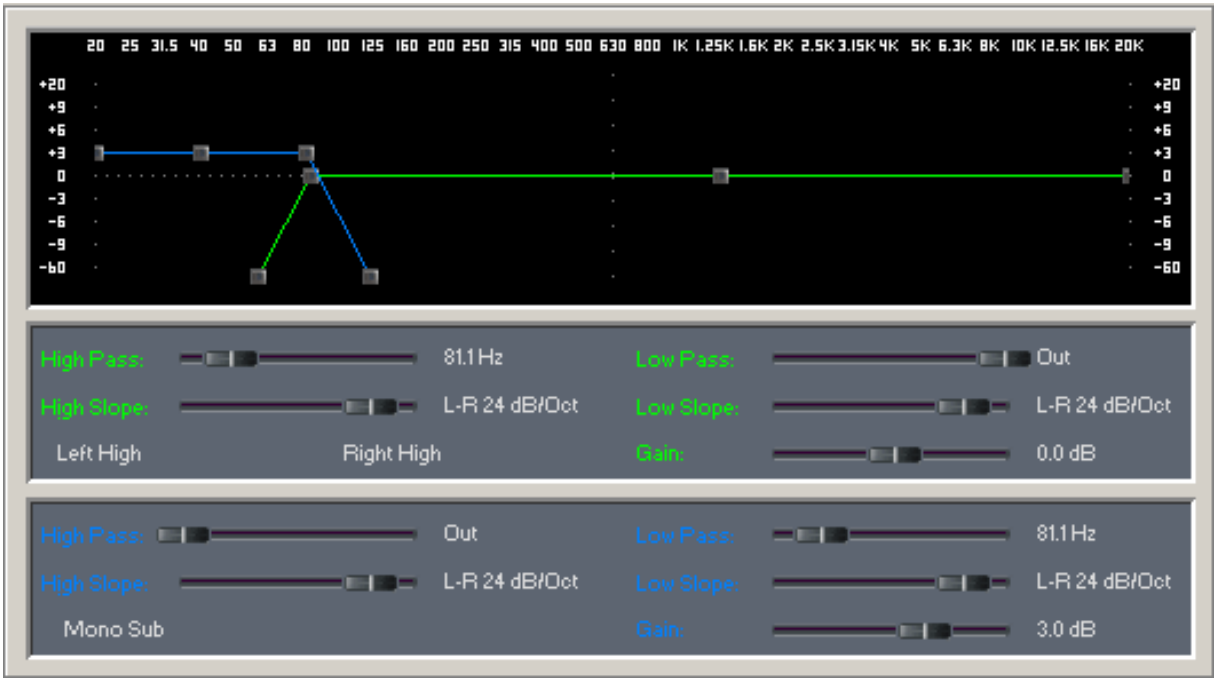

Technical Specifications

Acoustic cabinet:	SB15
Description:	Bass reinforcement. 15” Subwoofer
Power AES:	1.000 W.
Power Program:	2.000 W.
Sensitivity 2,83v @ 1m:	100 dB.
Max. SPL continuous:	130 dB.
Max. SPL peak:	136 dB.
Frequency response:	35 - 200 Hz.
Bass Loudspeakers:	15P1000ND

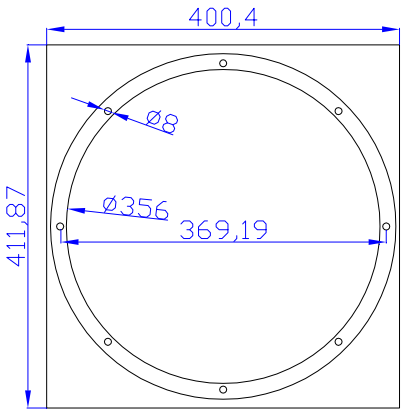

Base

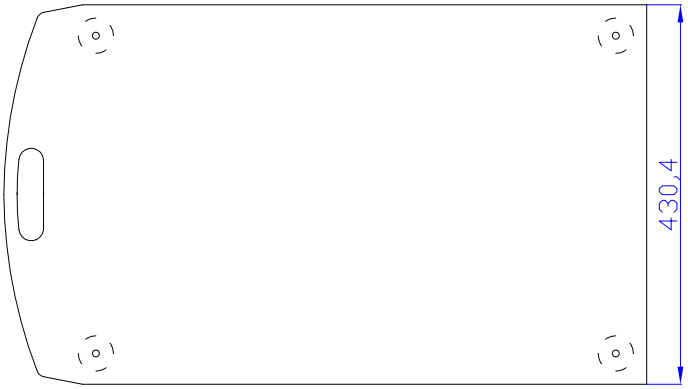

Rear

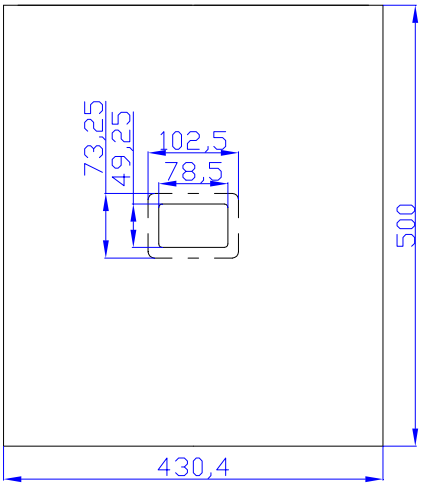

Lateral

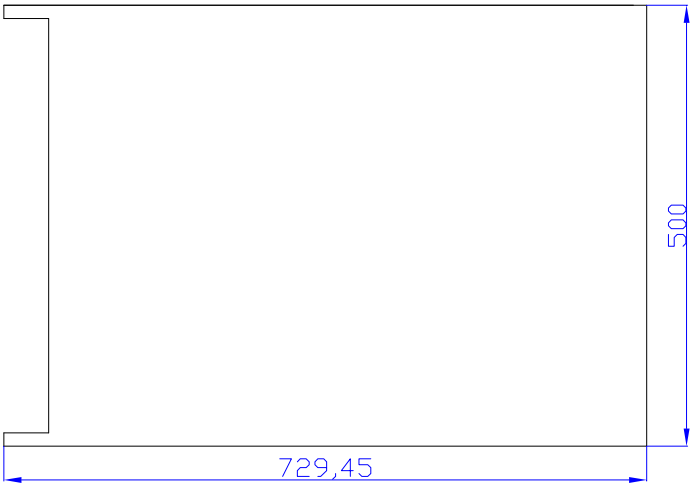

SB15/2 CAD

Front

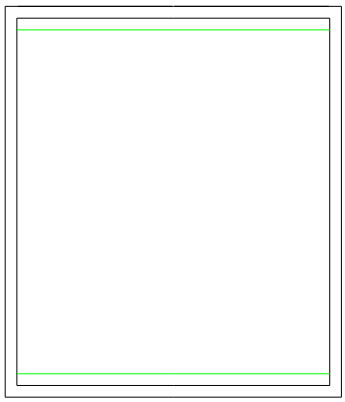

Lateral

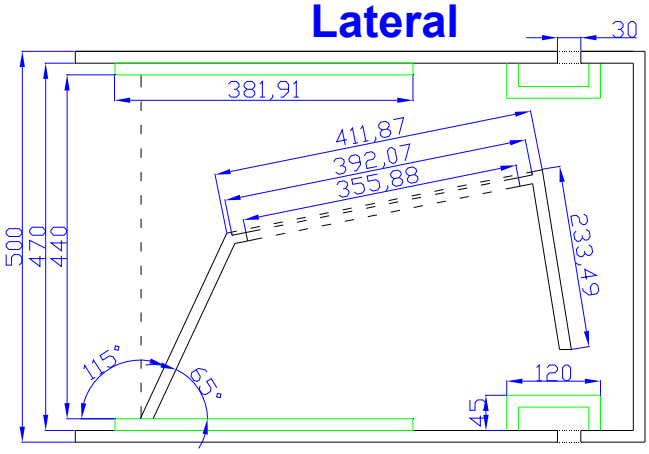

Cenital

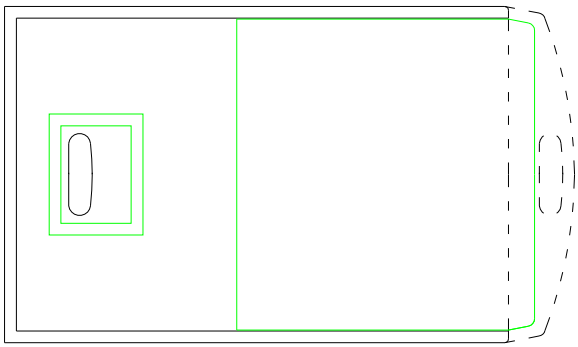

Base

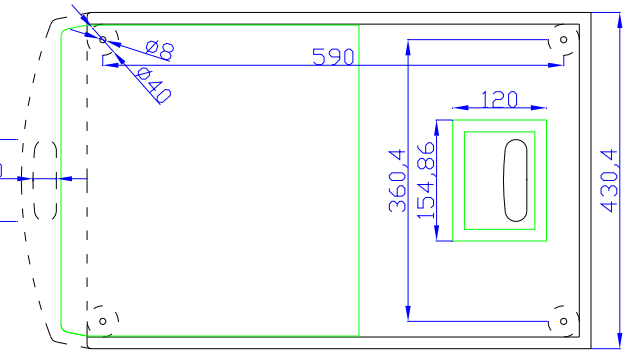

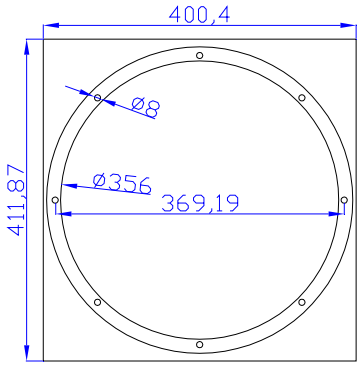

Base

Rear

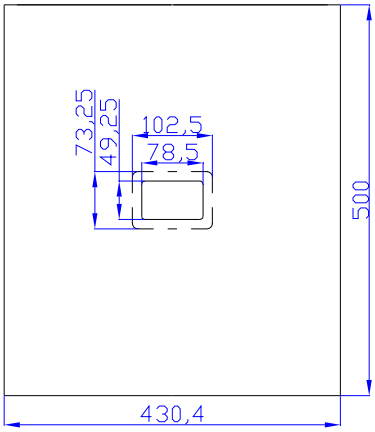

Lateral

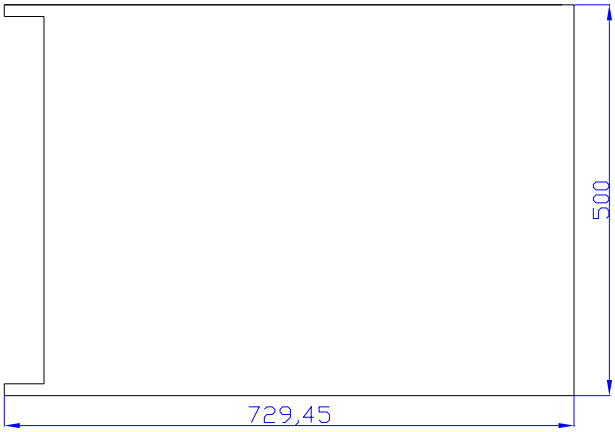

15P1000Nd

KEY FEATURES

- Real 1000 W AES power handling
- Sensitivity: 97 dB @ 2.83V
- 4” Duo Technology voice coil
- Forced air convection circuit for low power compression
- Extended controlled displacement: Xmax ± 8 mm.
- Massive mechanical displacement capability: 52 mm p-p

TECHNICAL SPECIFICATIONS

• Nominal diameter	380 mm. 15 in.
• Rated impedance	8 ohms
• Minimum impedance	6.3 ohms
• Power capacity*	1000 w AES
• Program power	2000 w
• Sensitivity	97 dB 2.83v @ 1m @ 2π
• Frequency range	30 - 2000 Hz
• Voice coil diameter	100 mm. 4 in.
• Magnetic assembly weight	4.62 kg. 10.16 lb.
• BL factor	24.3 N / A
• Voice coil length	21 mm
• Air gap height	12 mm
• X damage (peak to peak)	52 mm

Notes:
*The power capacity is determined according to AES2-1984 (r2003) standard.
Program power is defined as the transducer's ability to handle normal music program material.

DIMENSION DRAWINGS

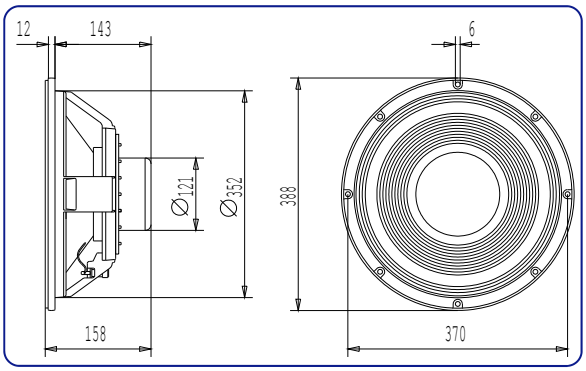

SB15/2 Presets

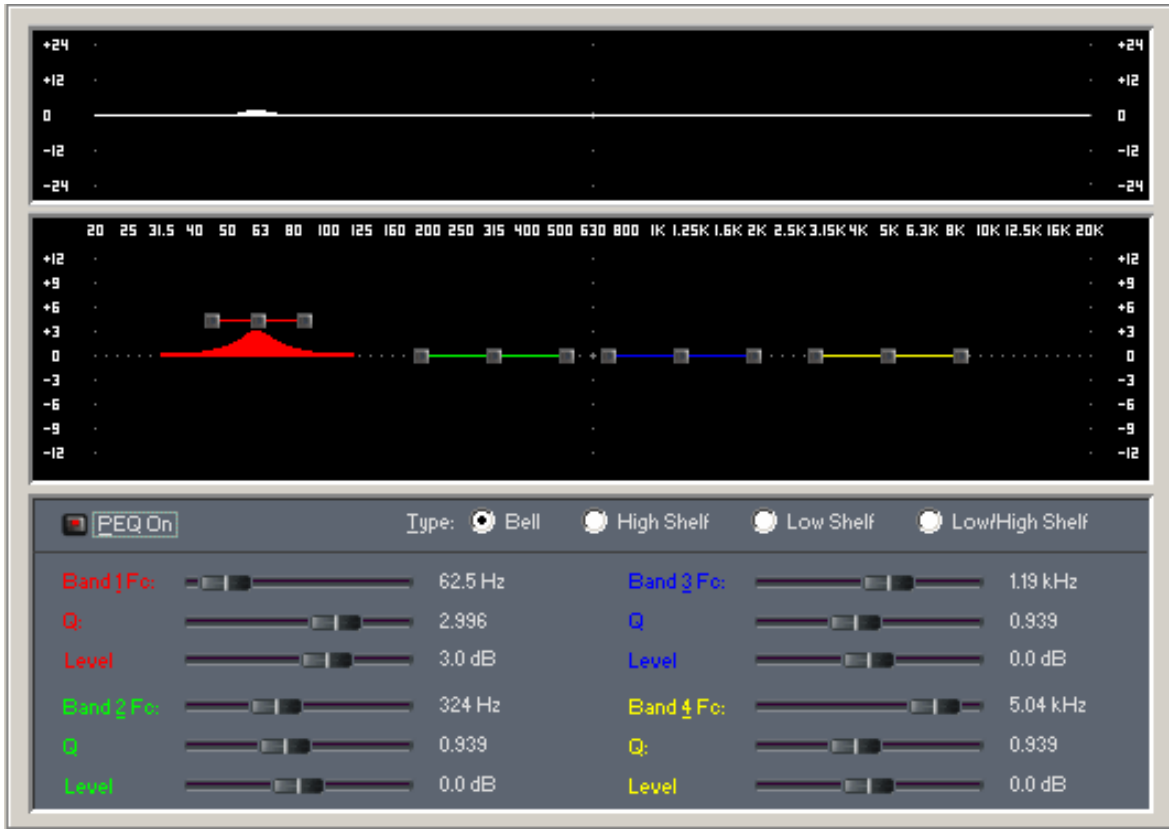

SB15/2 Crossover

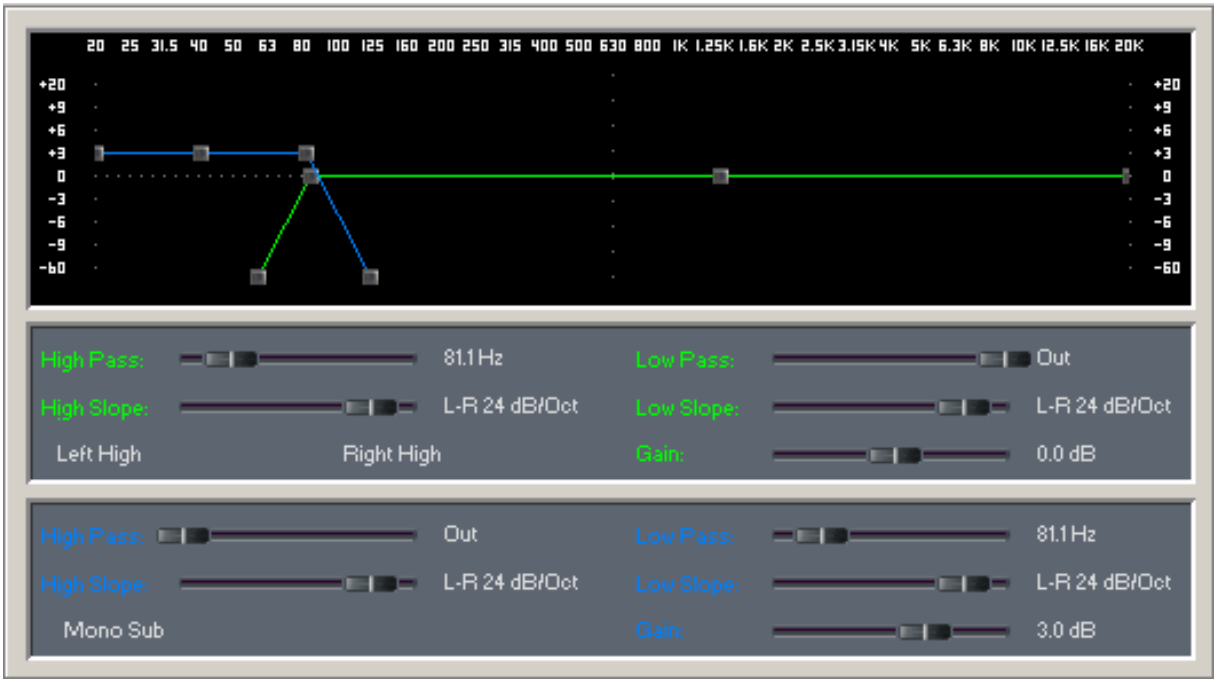

Technical Specifications

Acoustic cabinet:	SB15
Description:	Bass reinforcement. 15” Subwoofer
Power AES:	800 W.
Power Program:	1.600 W.
Sensitivity 2,83v @ 1m:	103 dB.
Max. SPL continuous:	132 dB.
Max. SPL peak:	138 dB.
Frequency response:	40 - 200 Hz.
Bass Loudspeakers:	15P80ND

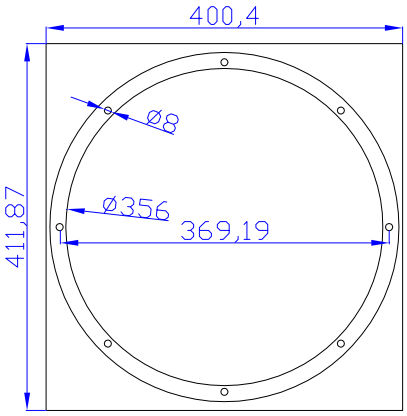

Base

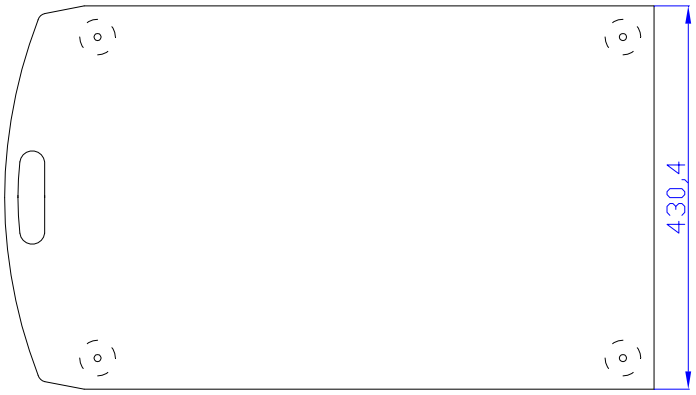

Rear

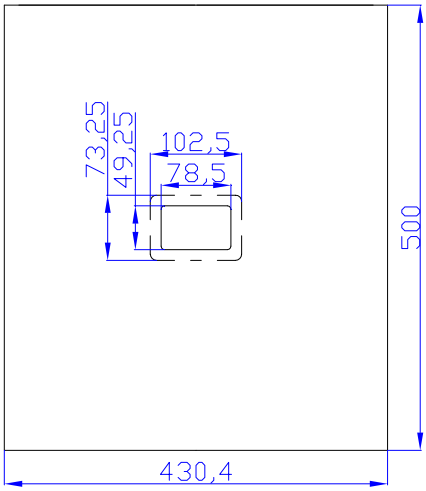

Lateral

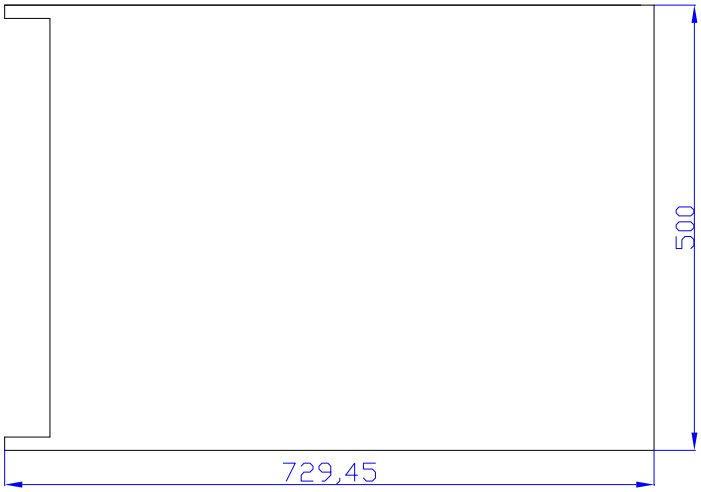

SB15/3 CAD

Front

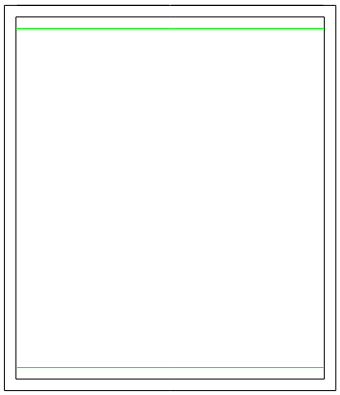

Lateral

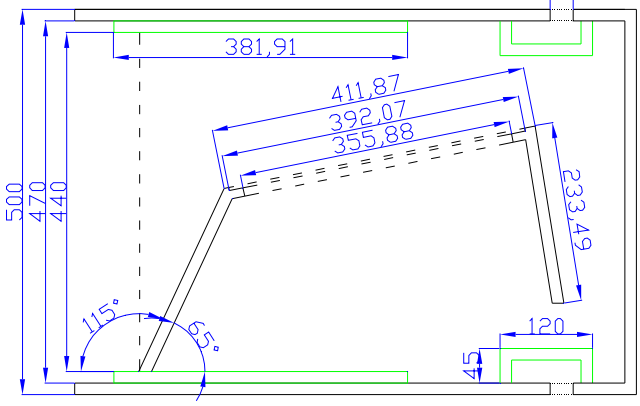

Cenital

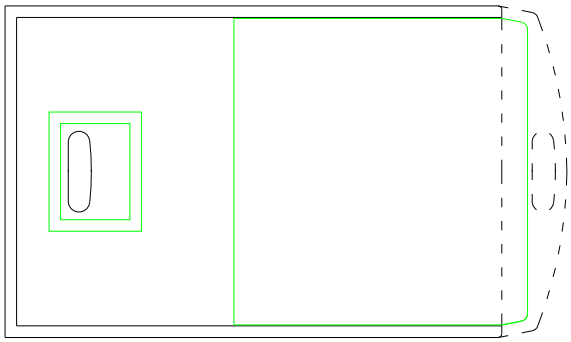

Base

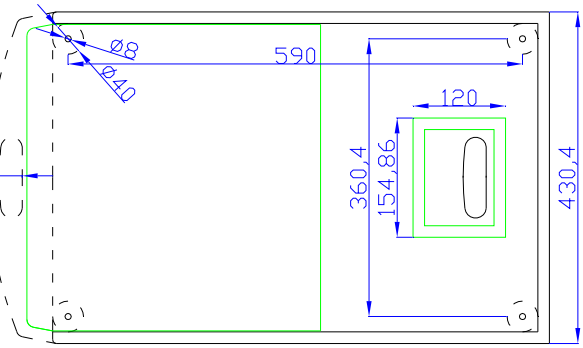

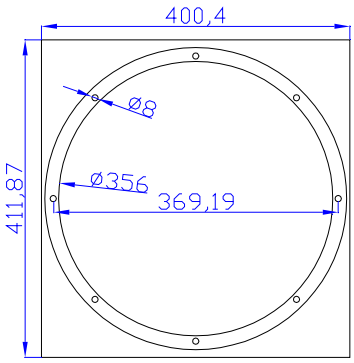

Base

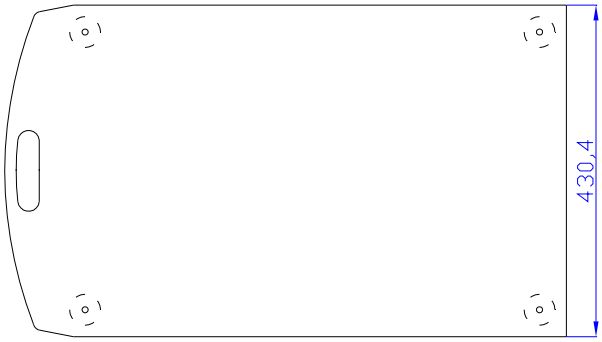

Rear

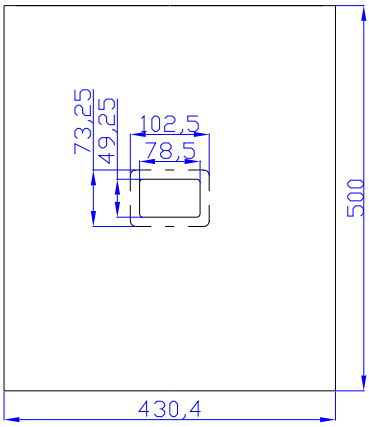

Lateral

SB15/3 Drivers

15P80Nd

KEY FEATURES

- Real 800 W AES power handling
- Sensitivity: 100 dB @ 2.83V
- 4” Duo Technology voice coil
- Forced air convection circuit for low power compression
- Extended controlled displacement: Xmax ± 7.5 mm.
- Massive mechanical displacement capability: 52 mm p-p

TECHNICAL SPECIFICATIONS

• Nominal diameter	380 mm. 15 in.
• Rated impedance	8 ohms
• Minimum impedance	6.6 ohms
• Power capacity*	800 w AES
• Program power	1600 w
• Sensitivity	100 dB 2.83v @ 1m @ 2π
• Frequency range	30 - 5000 Hz
• Voice coil diameter	100 mm. 4 in.
• Magnetic assembly weight	4.62 kg. 10.16 lb.
• BL factor	23.6 N / A
• Voice coil length	20 mm
• Air gap height	12 mm
• X damage (peak to peak)	52 mm

Notes:
*The power capacity is determined according to AES2-1984 (r2003) standard.
Program power is defined as the transducer's ability to handle normal music program material.

DIMENSION DRAWINGS

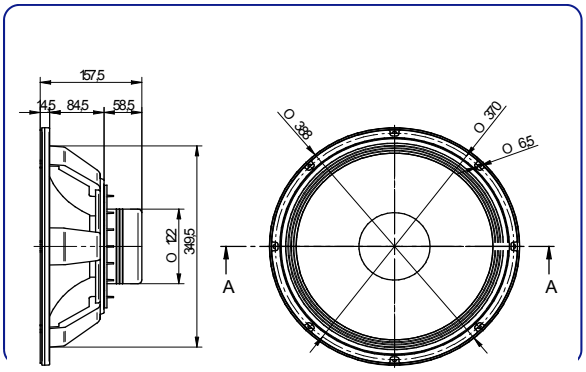

SB15/2 Presets

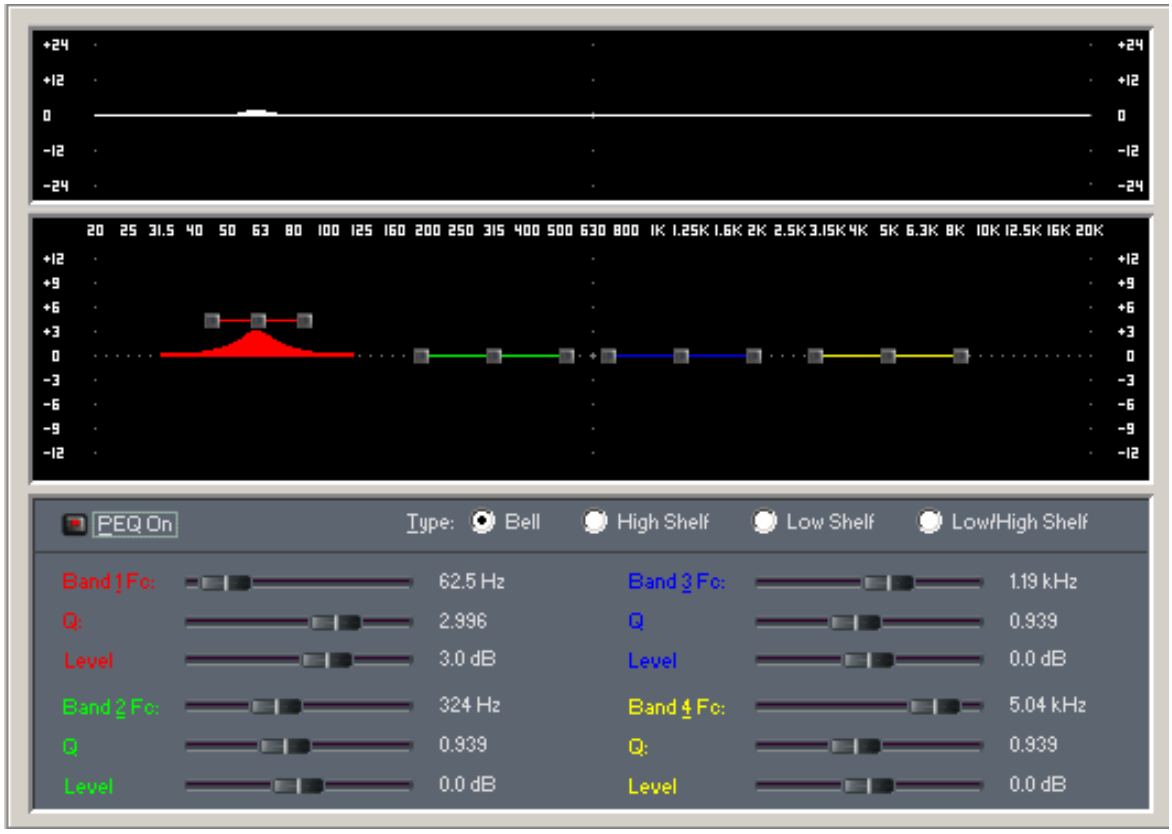

SB15/3 Crossover

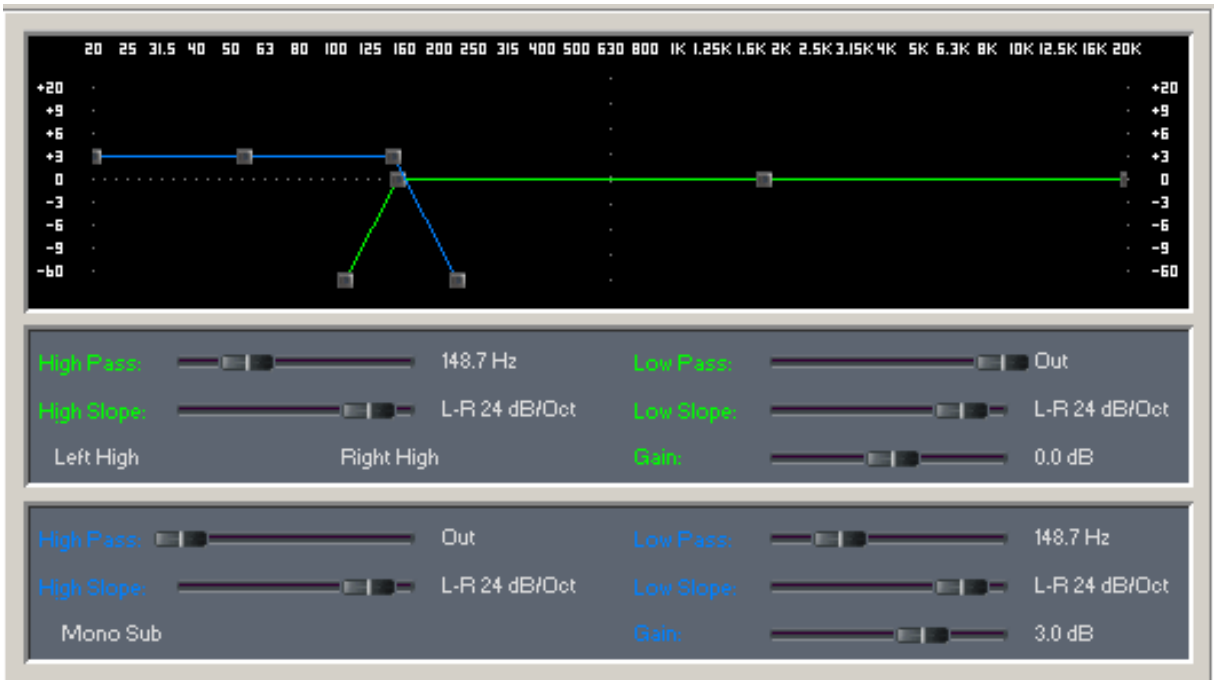

Technical Specifications

Acoustic cabinet:	SB18
Description:	Bass reinforcement. 18” subwoofer.
Power AES:	1.200 W.
Power Program:	2.400 W.
Sensitivity 2,83v @ 1m:	101 dB.
Max. SPL continuous:	132 dB.
Max. SPL peak:	138 dB.
Frequency response:	33 - 200 Hz
Bass Loudspeakers:	18P1200ND

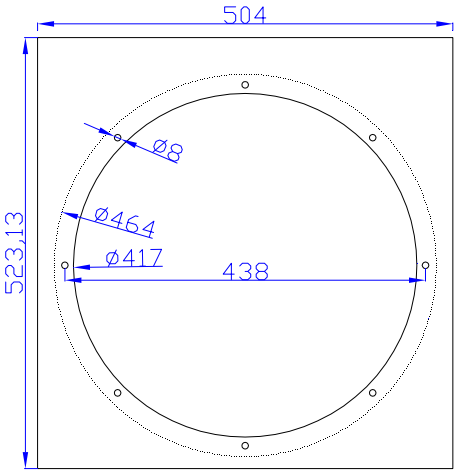

Base

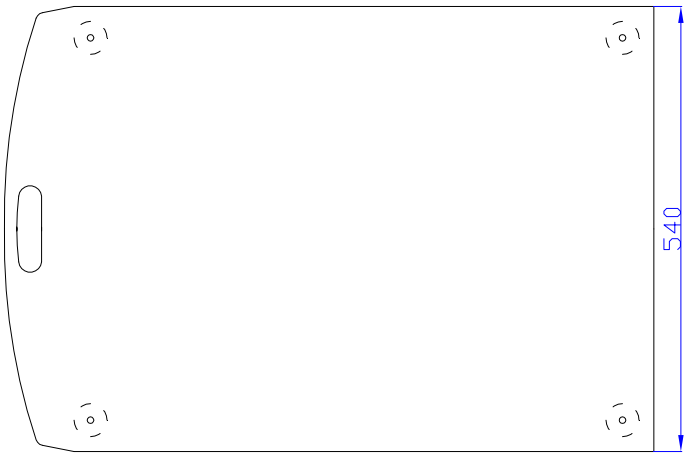

Rear

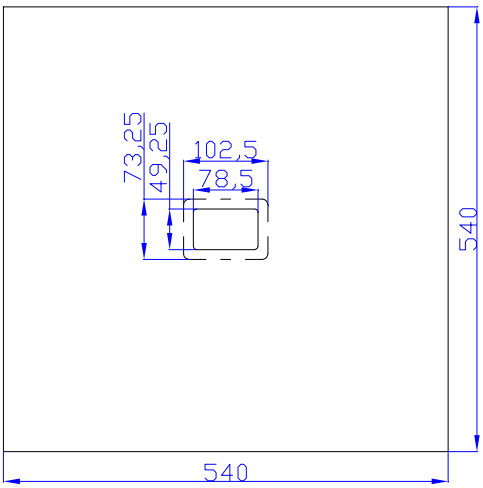

Lateral

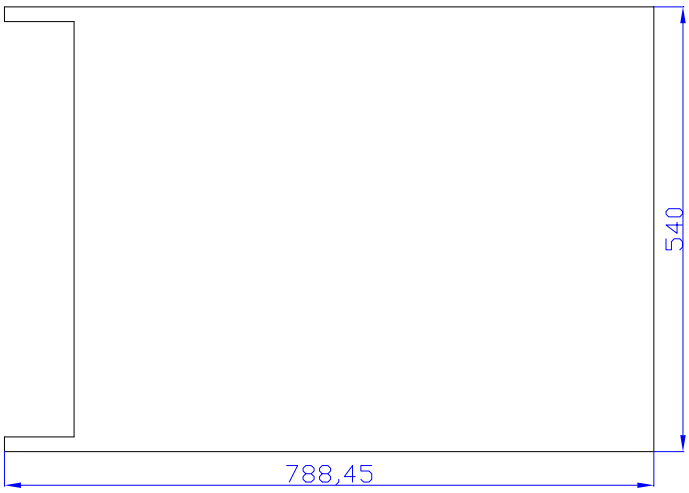

SB18/1 CAD

Front

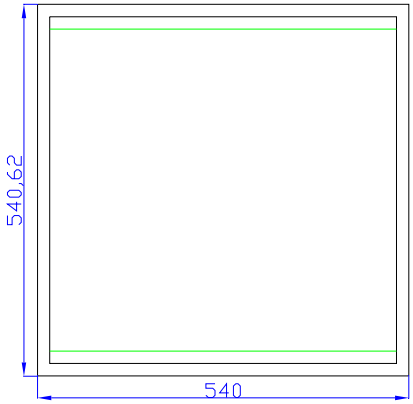

Lateral

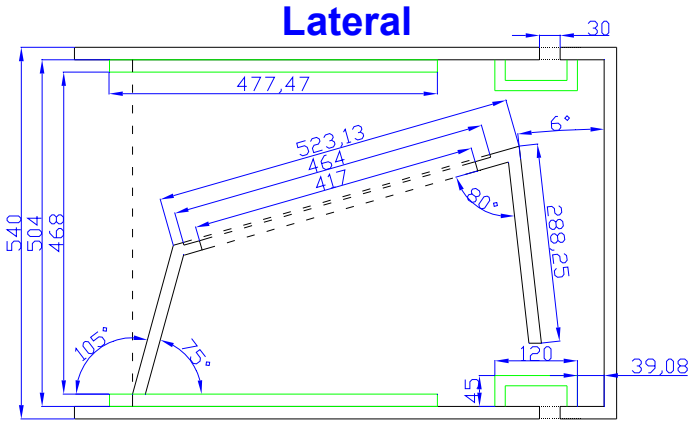

Cenital

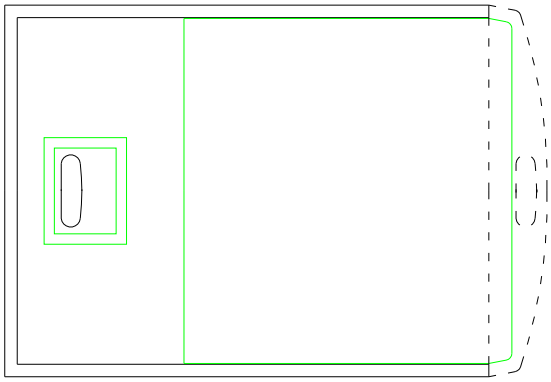

Base

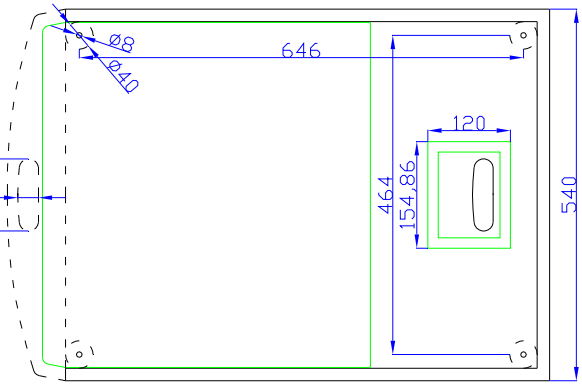

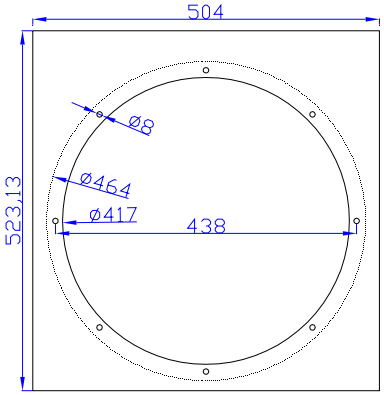

Base

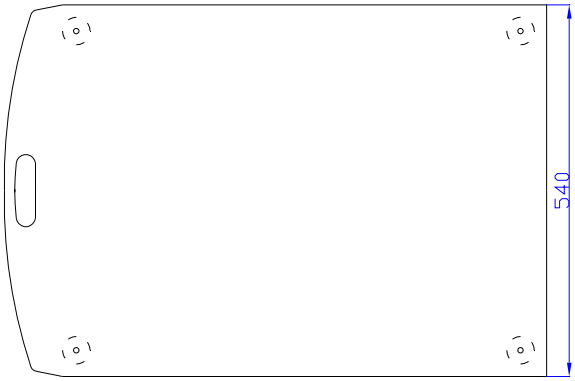

Rear

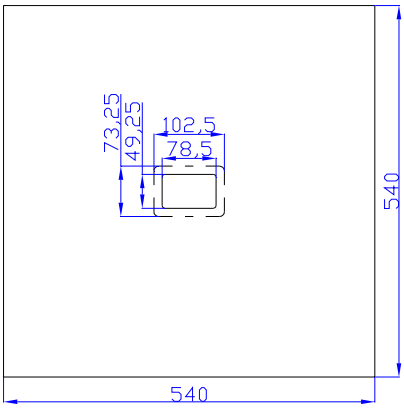

Lateral

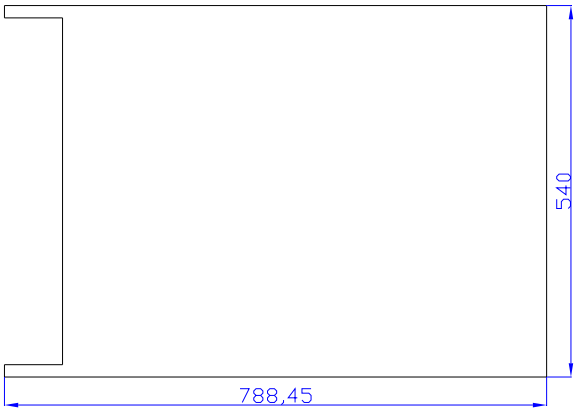

18P1200Nd

KEY FEATURES

- Real 1200 W AES power handling
- Sensitivity: 98 dB @ 2.83V
- 4” Duo Technology voice coil
- Forced air convection circuit for low power compression
- Extended controlled displacement: Xmax ± 9.5 mm.
- Massive mechanical displacement capability: 52 mm p-p

TECHNICAL SPECIFICATIONS

• Nominal diameter	460 mm. 18 in.
• Rated impedance	8 ohms
• Minimum impedance	6 ohms
• Power capacity*	1200 w AES
• Program power	2400 w
• Sensitivity	98 dB 2.83v @ 1m @ 2π
• Frequency range	25 - 2000 Hz
• Voice coil diameter	100 mm. 4 in.
• Magnetic assembly weight	6 kg. 13.2 lb.
• BL factor	26.3 N / A
• Voice coil length	25 mm
• Air gap height	14 mm
• X damage (peak to peak)	52 mm

Notes:
*The power capacity is determined according to AES2-1984 (r2003) standard.
Program power is defined as the transducer's ability to handle normal music program material.

DIMENSION DRAWINGS

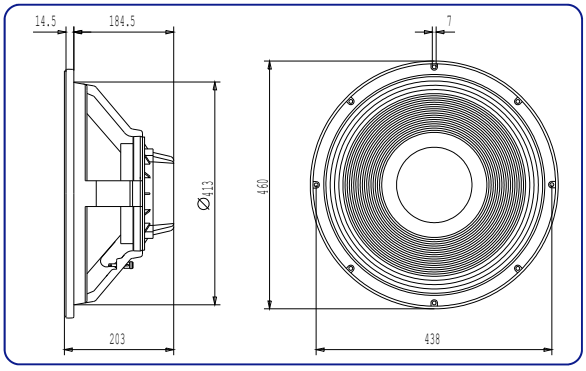

SB18/1 Presets

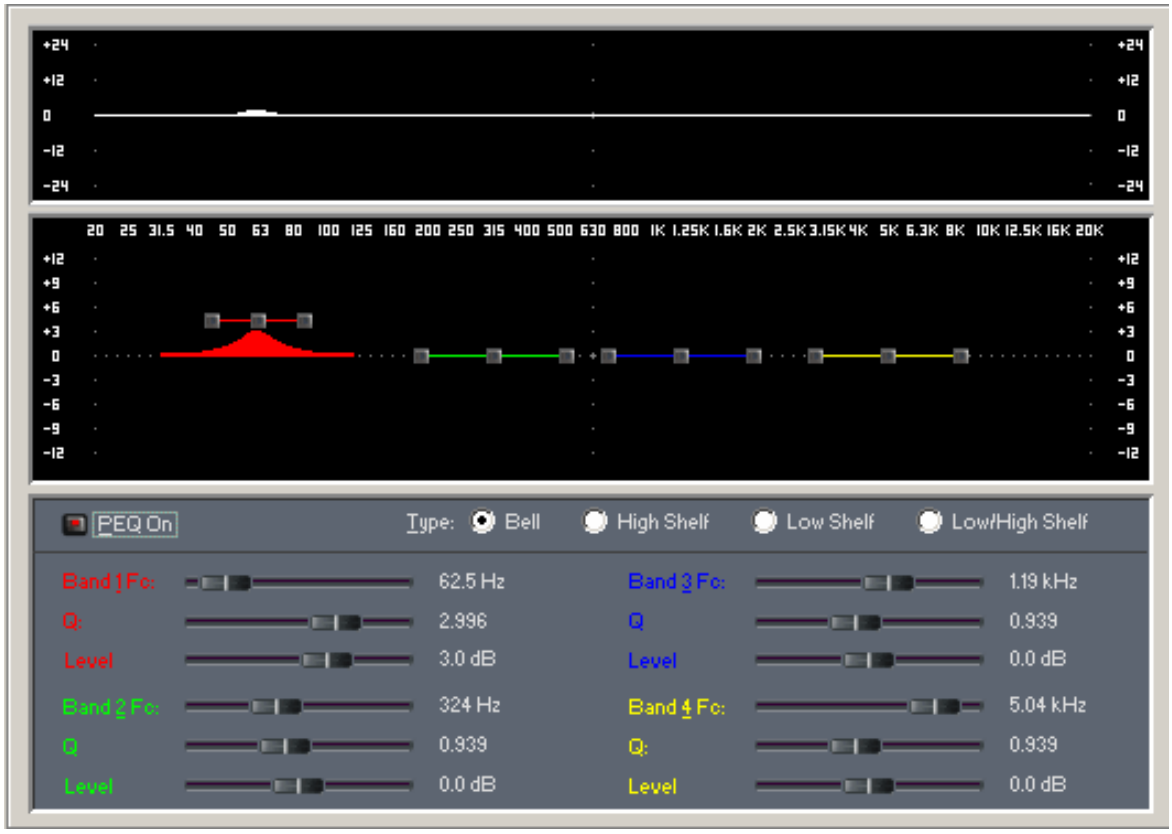

SB18/1 Crossover

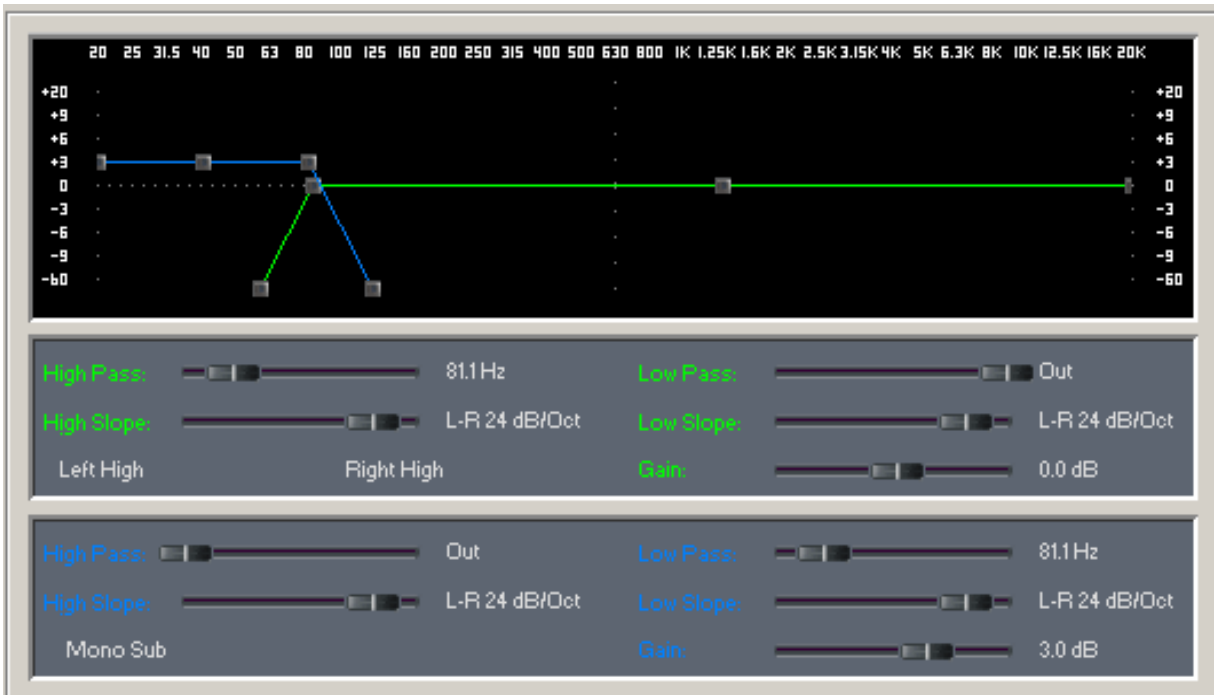

Technical Specifications

Acoustic cabinet:	SB18
Description:	Bass reinforcement. 18” subwoofer.
Power AES:	1.000 W.
Power Program:	2.000 W.
Sensitivity 2,83v @ 1m:	101 dB.
Max. SPL continuous:	131 dB.
Max. SPL peak:	137 dB.
Frequency response:	33 - 200 Hz.
Bass Loudspeakers:	18P1000ND

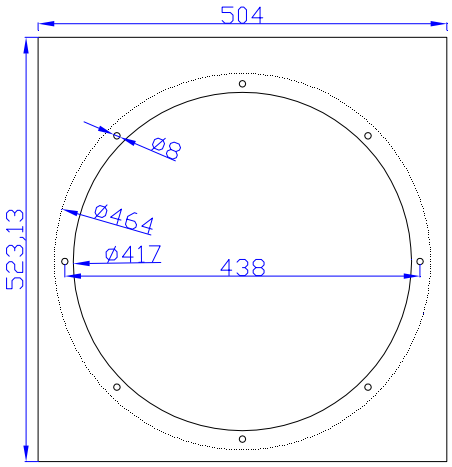

Base

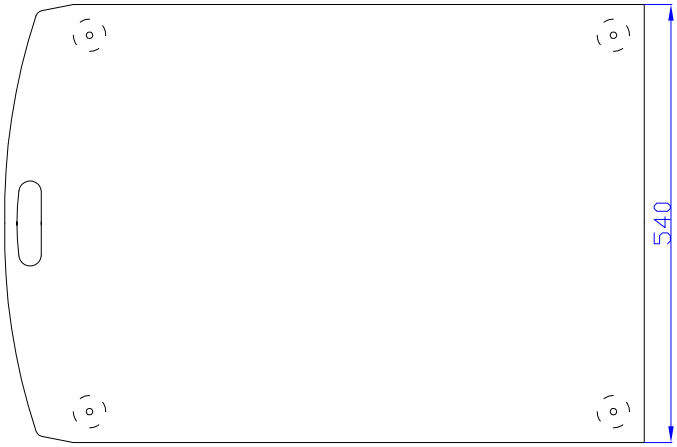

Rear

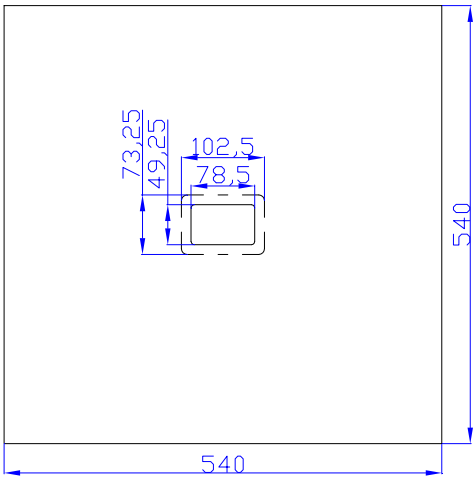

Lateral

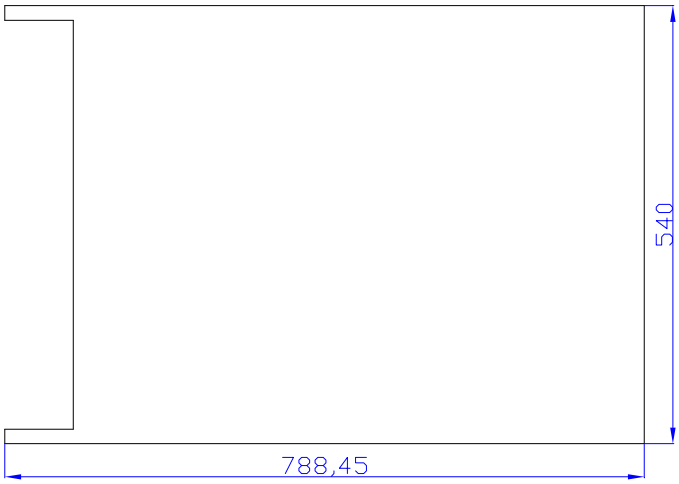

SB18/2 CAD

Front

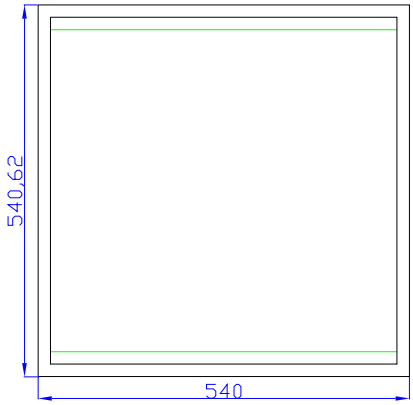

Lateral

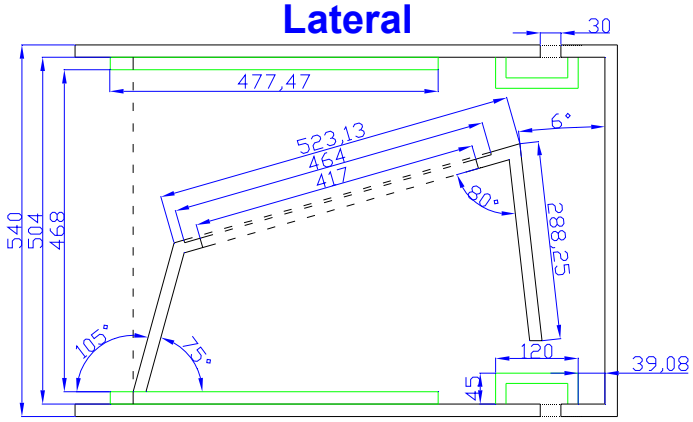

Cenital

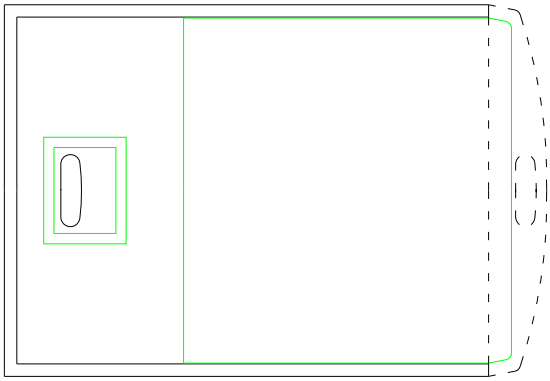

Base

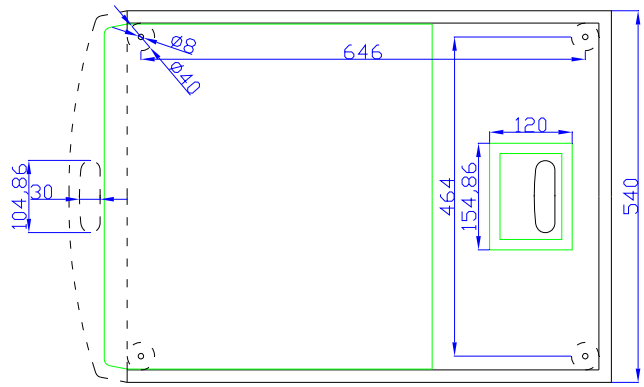

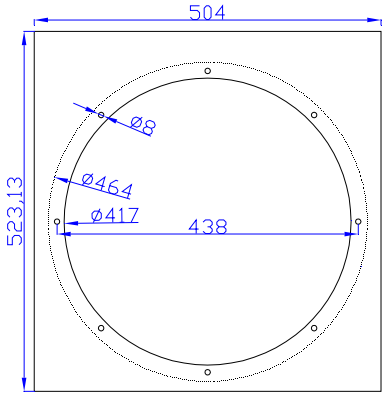

Base

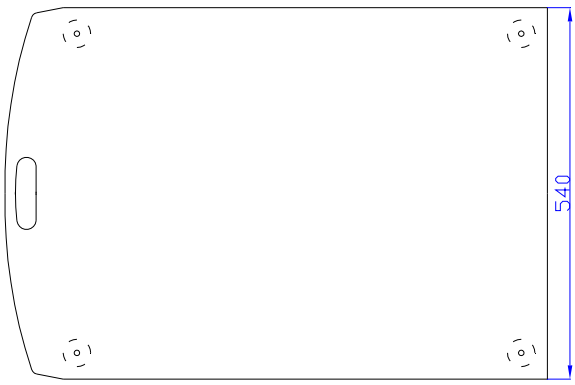

Rear

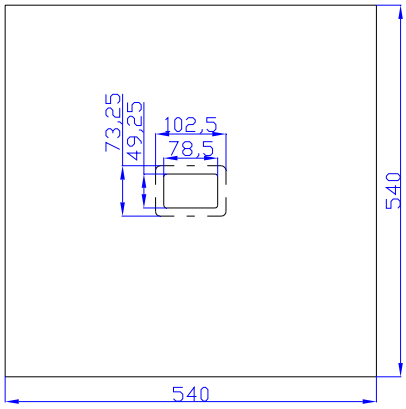

Lateral

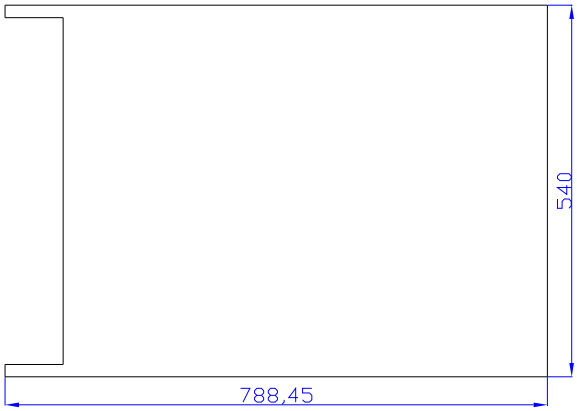

18P1000Nd

KEY FEATURES

- Real 1000 W AES power handling
- Sensitivity: 98 dB @ 2.83V
- 4” Duo Technology voice coil
- Forced air convection circuit for low power compression
- Extended controlled displacement: Xmax ± 8 mm.
- Massive mechanical displacement capability: 52 mm p-p

TECHNICAL SPECIFICATIONS

• Nominal diameter	460 mm. 18 in.
• Rated impedance	8 ohms
• Minimum impedance	6.2 ohms
• Power capacity*	1000 w AES
• Program power	2000 w
• Sensitivity	98 dB 2.83v @ 1m @ 2π
• Frequency range	25 - 2000 Hz
• Voice coil diameter	100 mm. 4 in.
• Magnetic assembly weight	4.62 kg. 10.16 lb.
• BL factor	24.3 N / A
• Voice coil length	21 mm
• Air gap height	12 mm
• X damage (peak to peak)	52 mm

Notes:
*The power capacity is determined according to AES2-1984 (r2003) standard.
Program power is defined as the transducer's ability to handle normal music program material.

DIMENSION DRAWINGS

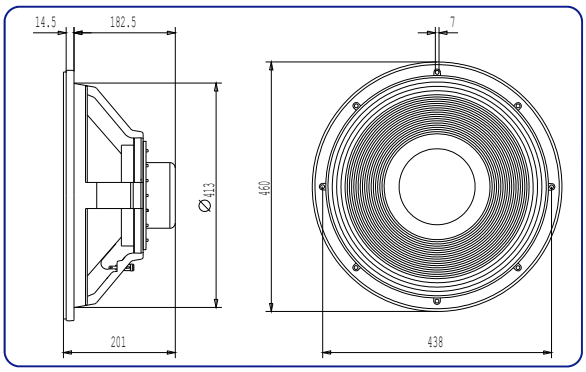

SB18/2 Presets

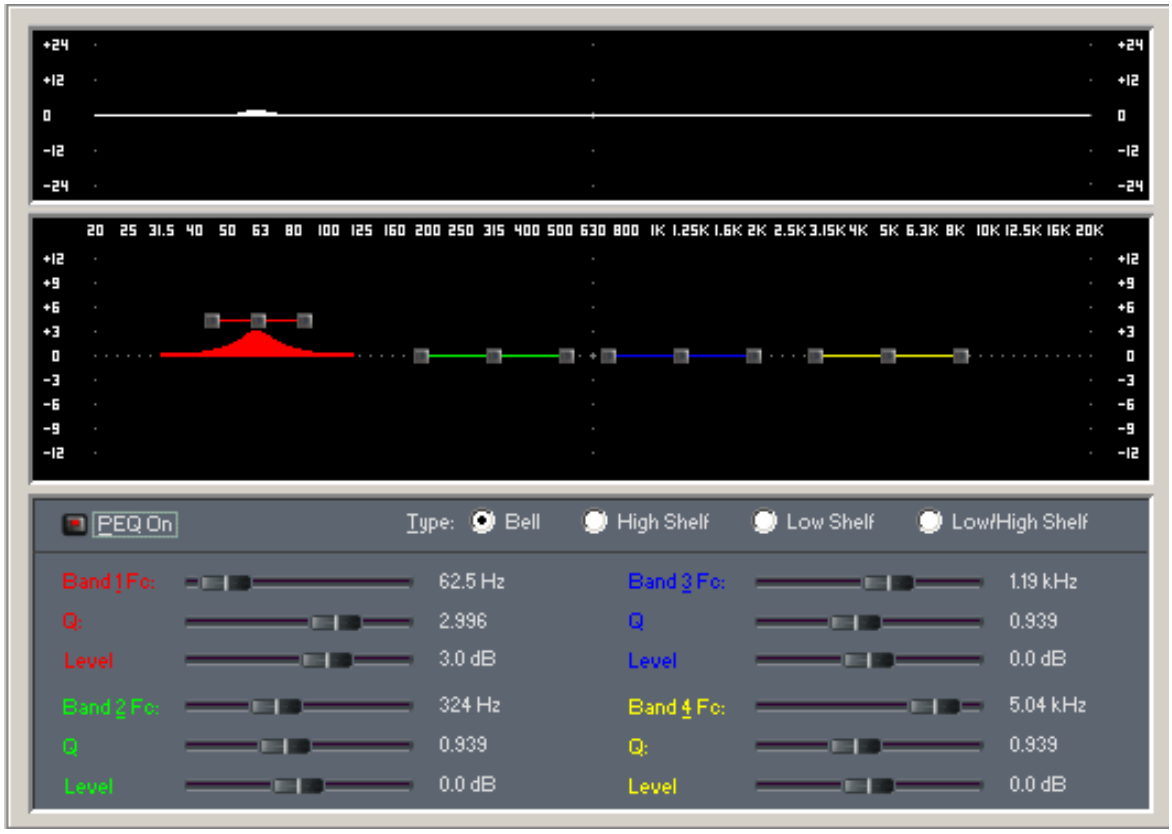

SB18/2 Crossover

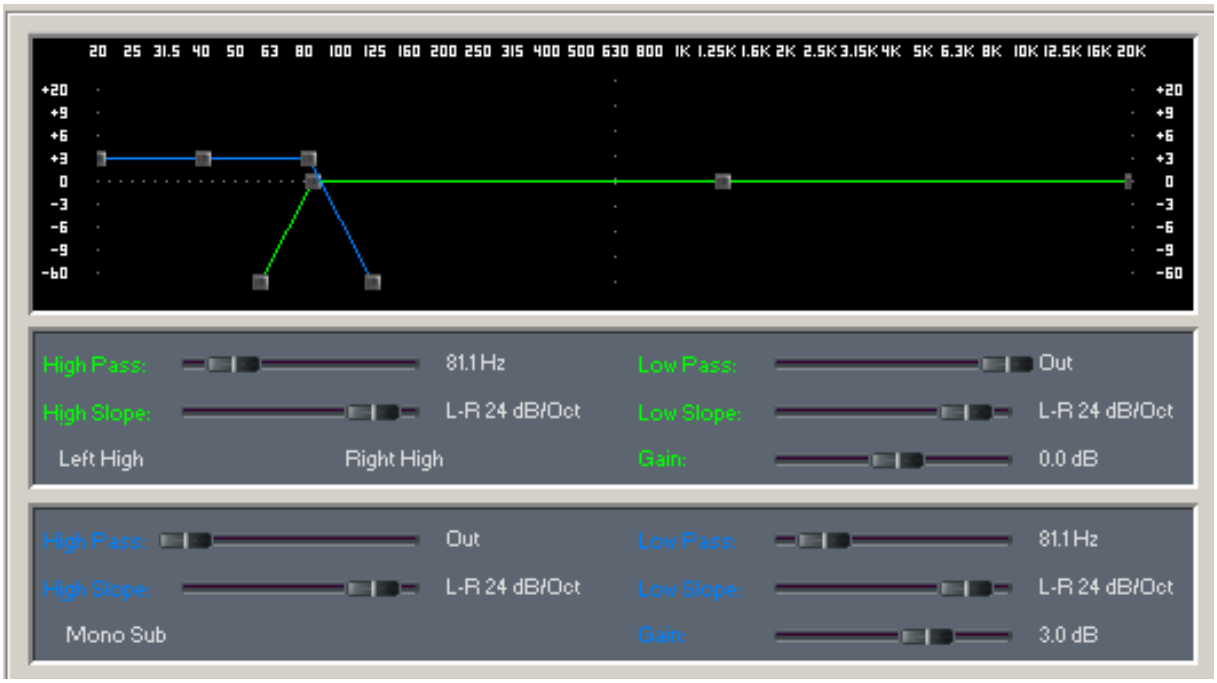

Technical Specifications

Acoustic cabinet:	SB18
Description:	Bass reinforcement. 18” subwoofer.
Power AES:	800 W.
Power Program:	1.600 W.
Sensitivity 2,83v @ 1m:	102 dB.
Max. SPL continuous:	131 dB.
Max. SPL peak:	137 dB.
Frequency response:	37 - 200 Hz.
Bass Loudspeakers:	18P80ND

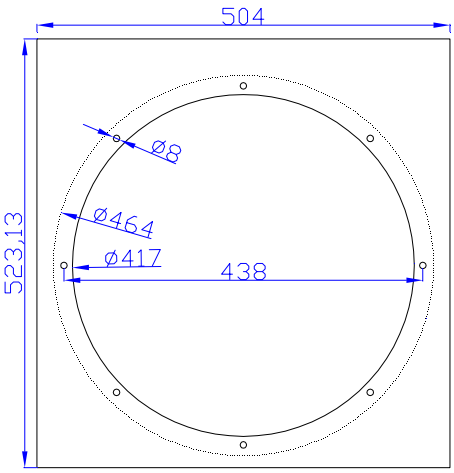

Base

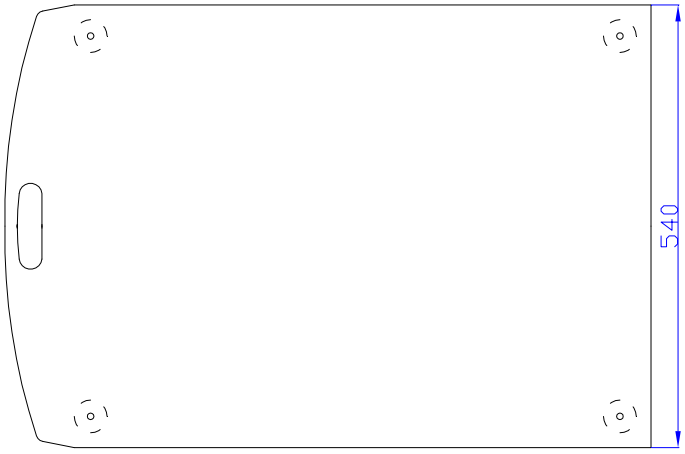

Rear

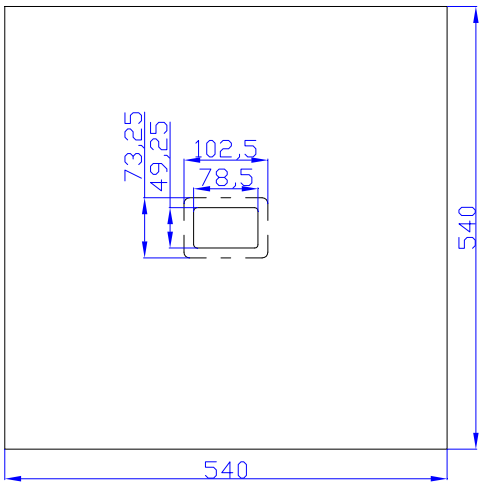

Lateral

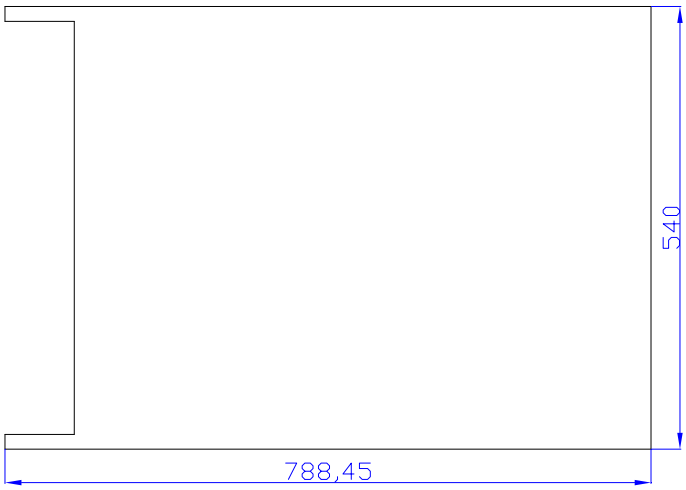

SB18/3 CAD

Front

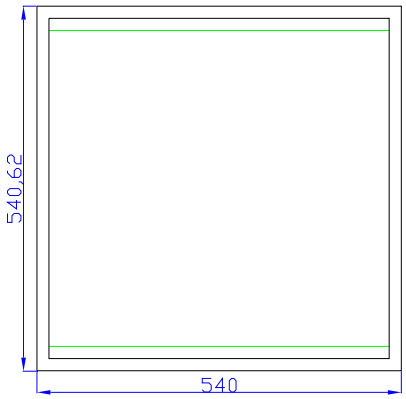

Lateral

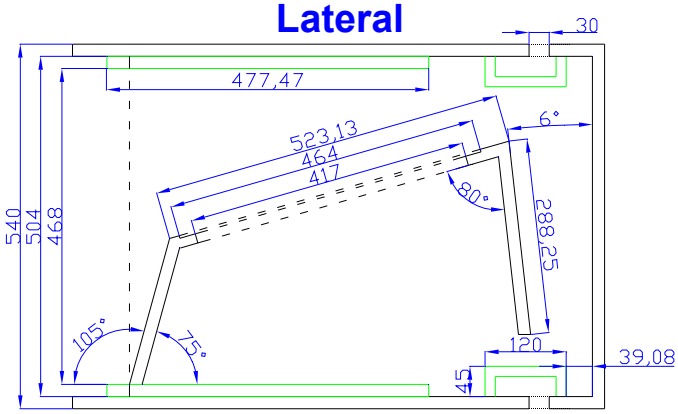

Cenital

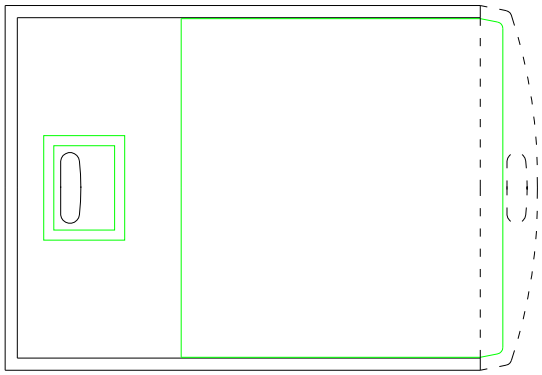

Base

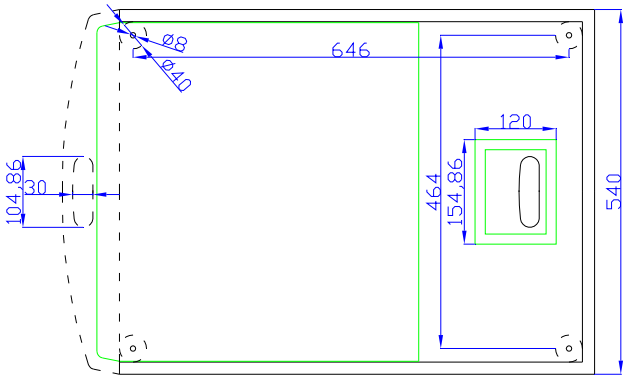

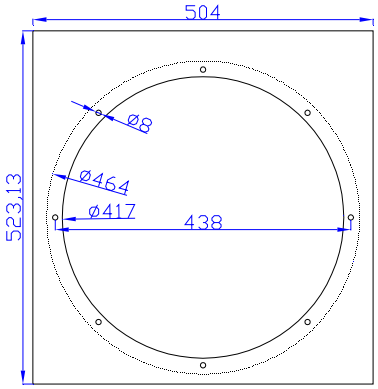

Base

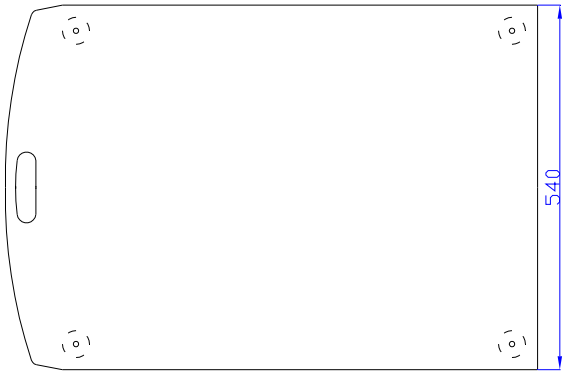

Rear

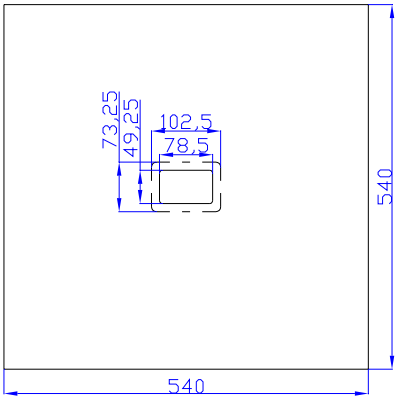

Lateral

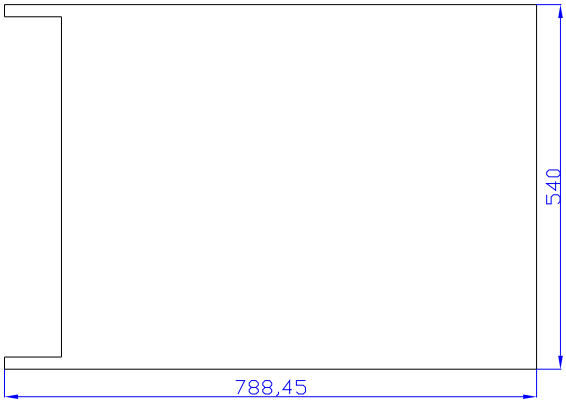

18P80Nd

KEY FEATURES

- Real 800 W AES power handling
- Sensitivity: 100 dB @ 2.83V
- 4” Duo Technology voice coil
- Carbon fiber reinforced paper cone
- Forced air convection circuit for low power compression
- Extended controlled displacement: Xmax ± 7.5 mm.
- Massive mechanical displacement capability: 52 mm p-p

TECHNICAL SPECIFICATIONS

• Nominal diameter	460 mm. 18 in.
• Rated impedance	8 ohms
• Minimum impedance	5.8 ohms
• Power capacity*	800 w AES
• Program power	1600 w
• Sensitivity	100 dB 2.83v @ 1m @ 2π
• Frequency range	25 - 4000 Hz
• Voice coil diameter	100 mm. 4 in.
• Magnetic assembly weight	4.62 kg. 10.16 lb.
• BL factor	21.9 N / A
• Voice coil length	20 mm
• Air gap height	12 mm
• X damage (peak to peak)	52 mm

Notes:
*The power capacity is determined according to AES2-1984 (r2003) standard.
Program power is defined as the transducer's ability to handle normal music program material.

DIMENSION DRAWINGS

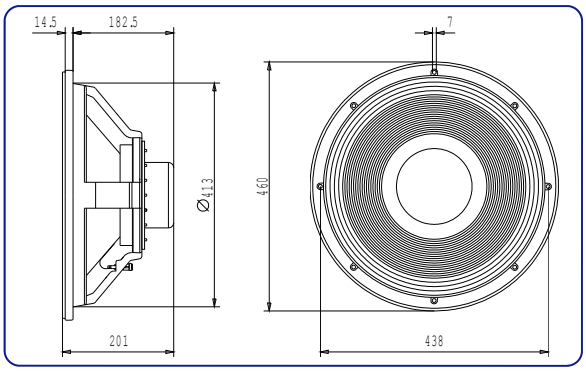

SB18/3 Presets

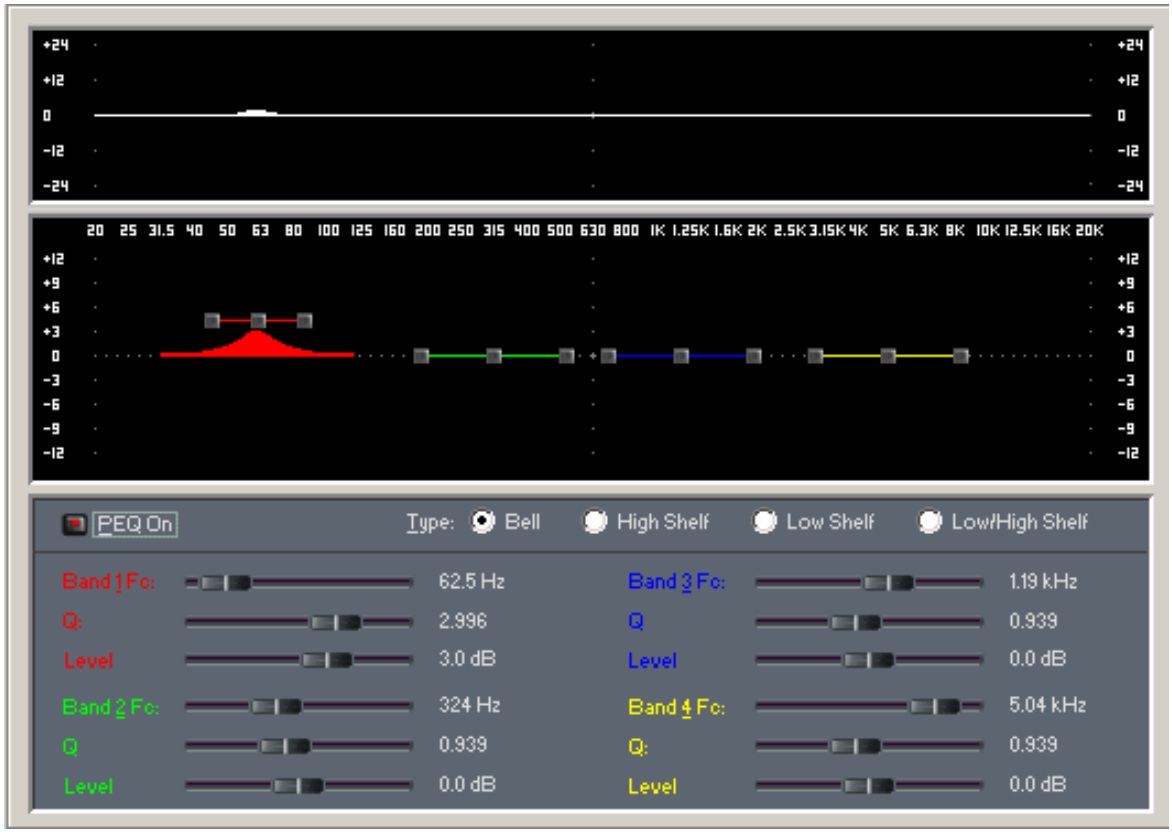

SB18/3 Crossover

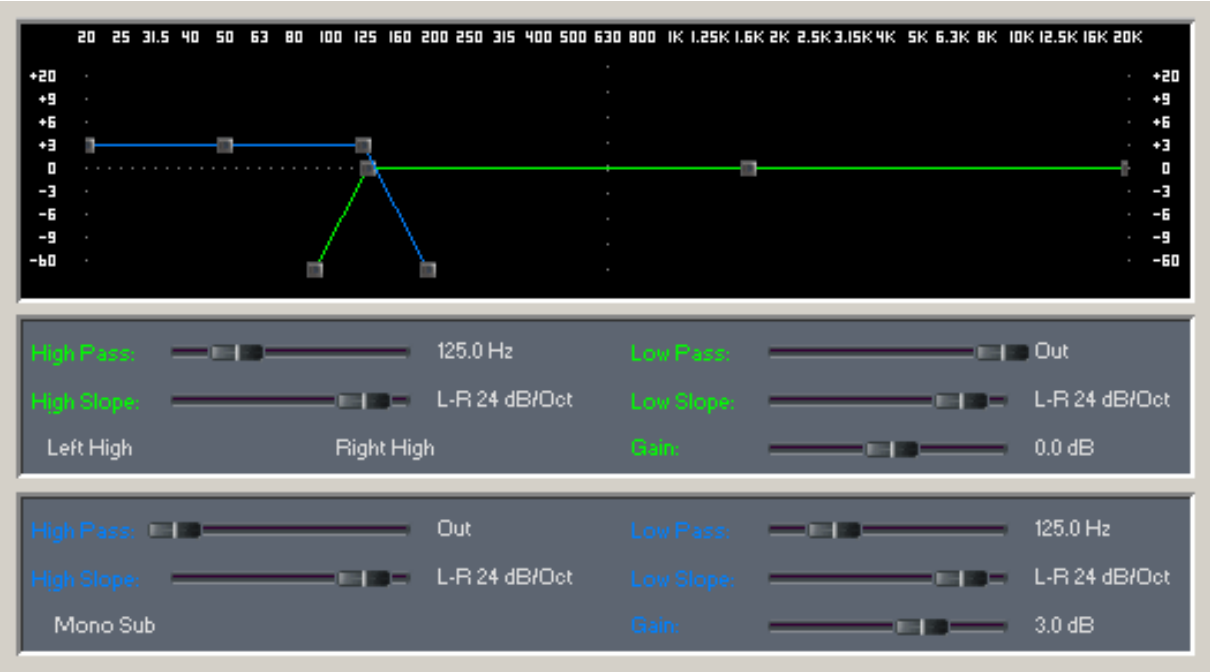

Technical Specifications

Acoustic cabinet:	SM15
Description:	Stage monitor. 15” coaxial
Power AES:	350 W.
Power Program:	700 W.
Sensitivity 2,83v @ 1m:	99 dB.
Max. SPL continuous:	124 dB.
Max. SPL peak:	130 dB.
Frequency response:	43 - 20.000Hz.
Coverage (H x V):	80º conical
Loudspeaker:	15XA38ND
Crossover:	FC-15/1

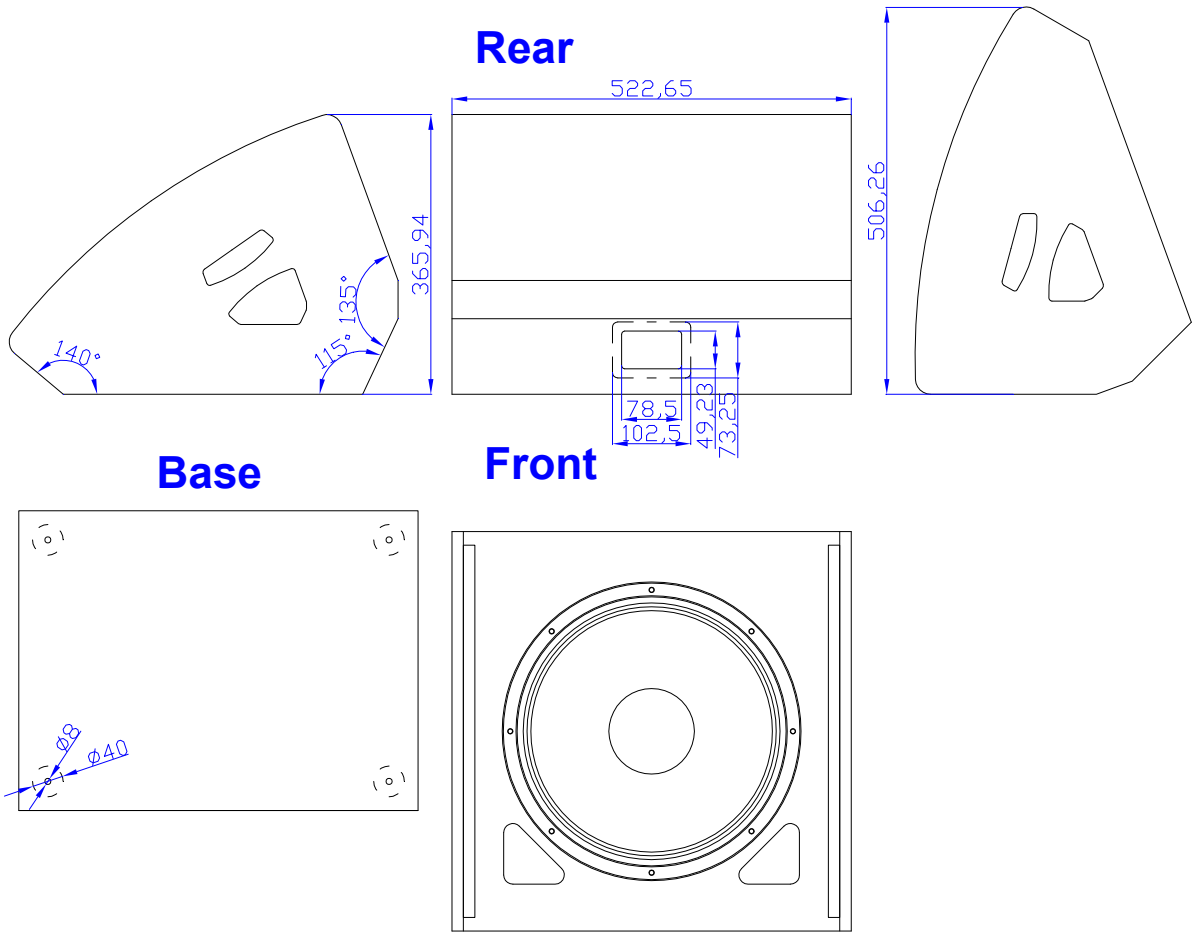

SM15/1 CAD

Lateral

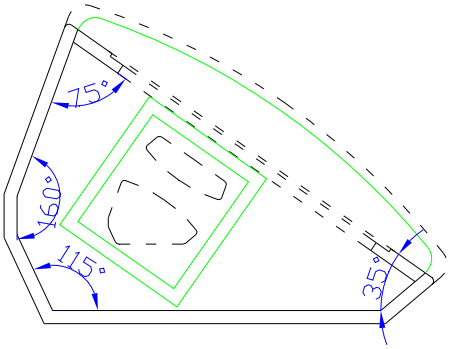

Front

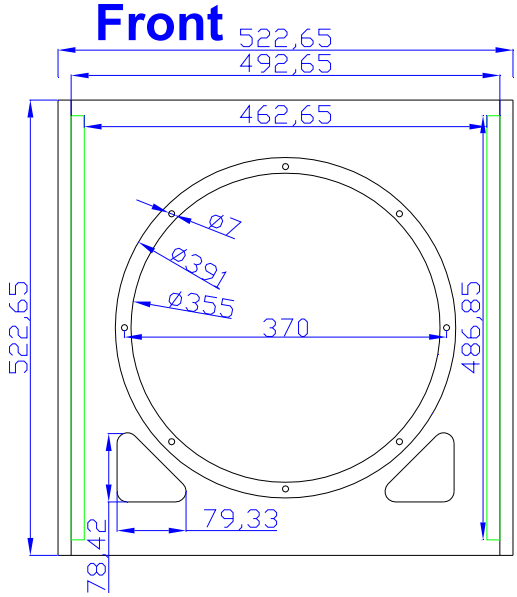

Lateral

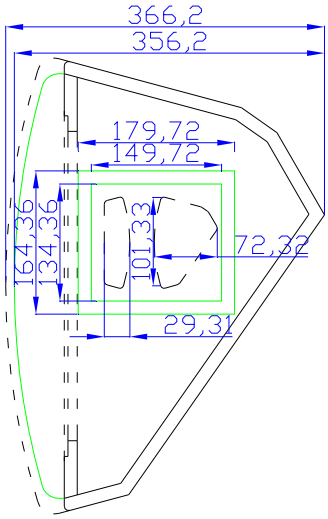

Rear

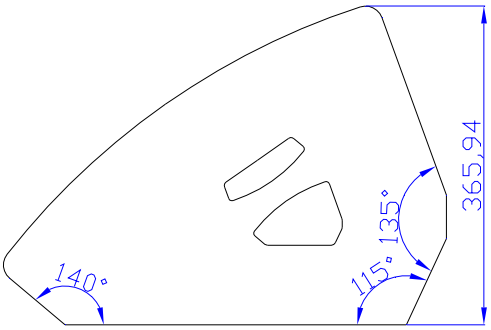

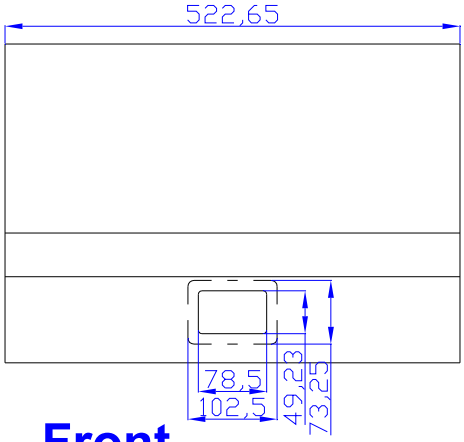

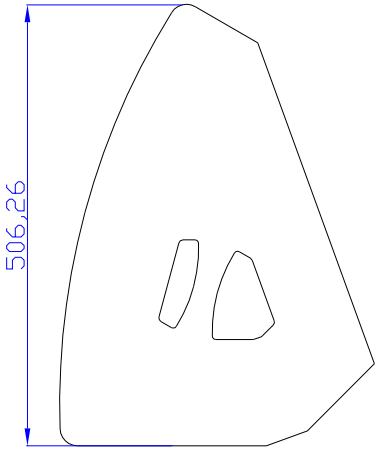

Base

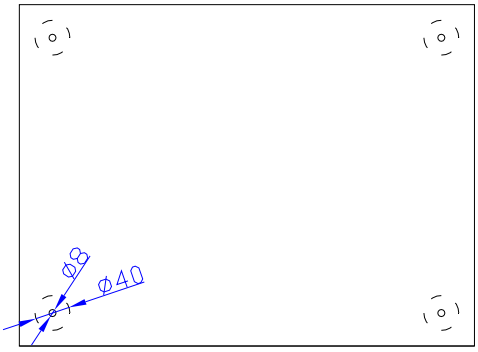

Front

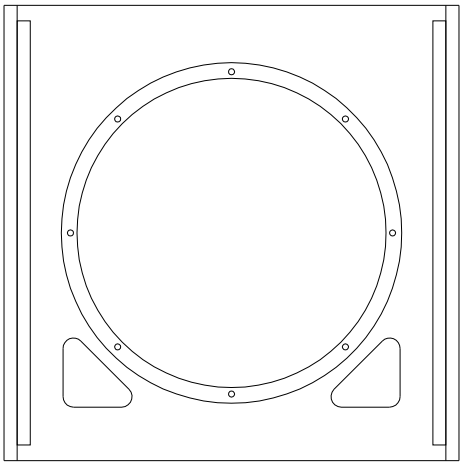

15XA38Nd

KEY FEATURES

- 15” bass loudspeaker and 2” exit compression driver combination
- Excelent power handling: 350 W AES (LF unit) - 90 W AES (HF unit)
- Extended and linear frequency response (25-20000 Hz)
- High sensitivity: 99 dB (LF unit) - 105 dB (HF unit)
- Low weight (common neodymium magnet system for both units)
- Bass loudspeaker designed for compact bass reflex cabinets

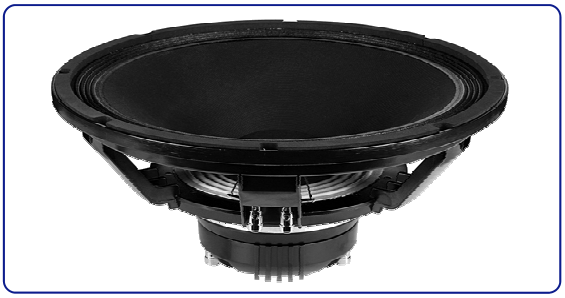

TECHNICAL SPECIFICATIONS

LF Unit

• Nominal diameter	380 mm. 15 in.
• Rated impedance	8 ohms
• Minimum impedance	7.6 ohms
• Power capacity*	350 w AES
• Program power	700 w
• Sensitivity	99 dB 2.83v @ 1m @ 2π
• Frequency range	25 - 3500 Hz
• Voice coil diameter	100 mm. 4 in.
• Magnetic assembly weight	4.2 kg. 9.24 lb.
• BL factor	18.2 N / A
• Voice coil length	16 mm
• Air gap height	9 mm
• X damage (peak to peak)	28 mm

HF Unit

• Throat diameter	50.8 mm. 2 in
• Rated impedance	16 ohms
• Power capacity*	90 w AES above 1 kHz
• Program power	180 w above 1 kHz
• Sensitivity**	105 dB 1w @ 1m
• Frequency range	500- 20000 Hz
• Voice coil diameter	72.2 mm. 2.87 in.

Notes:
*The power capacity is determined according to AES2-1984 (r2003) standard.
Program power is defined as the transducer's ability to handle normal music program material.

DIMENSION DRAWINGS

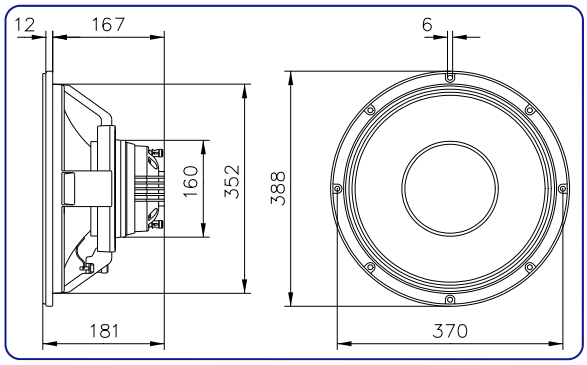

SM15/1 Presets

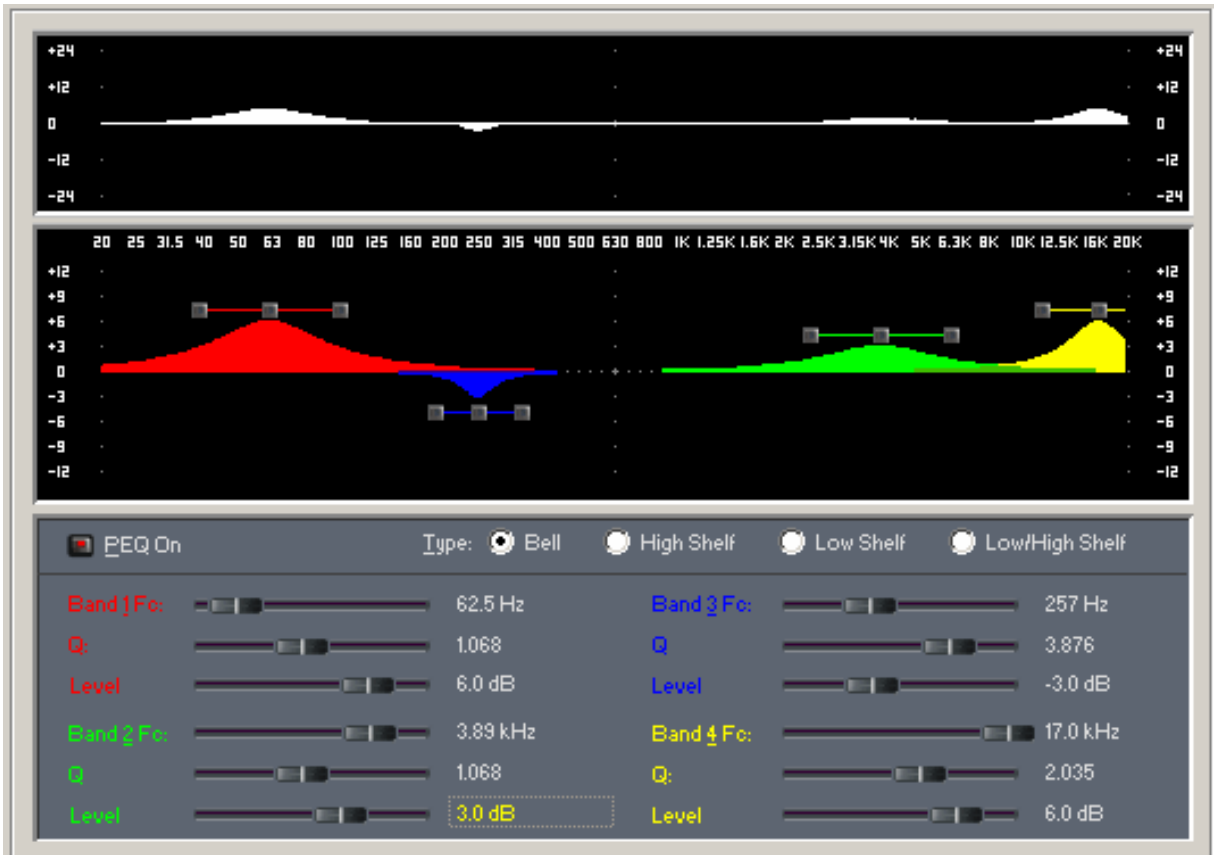

SM15/1 Crossover

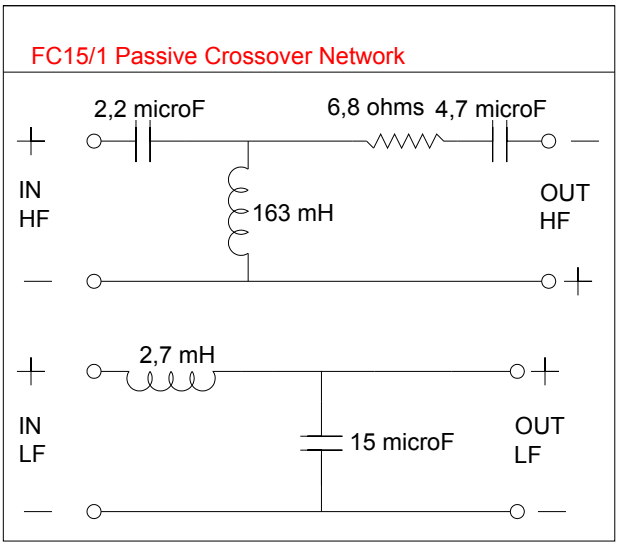

Technical Specifications

Acoustic cabinet:	SM15
Description:	Stage monitor. 15” coaxial.
Power AES:	300 W.
Power Program:	600 W.
Sensitivity 2,83v @ 1m:	99 dB.
Max. SPL continuous:	124 dB.
Max. SPL peak:	130 dB.
Frequency response:	43 - 17.000Hz.
Coverage (H x V):	90º conical
Loudspeaker:	15KX
Crossover:	FC-15/2

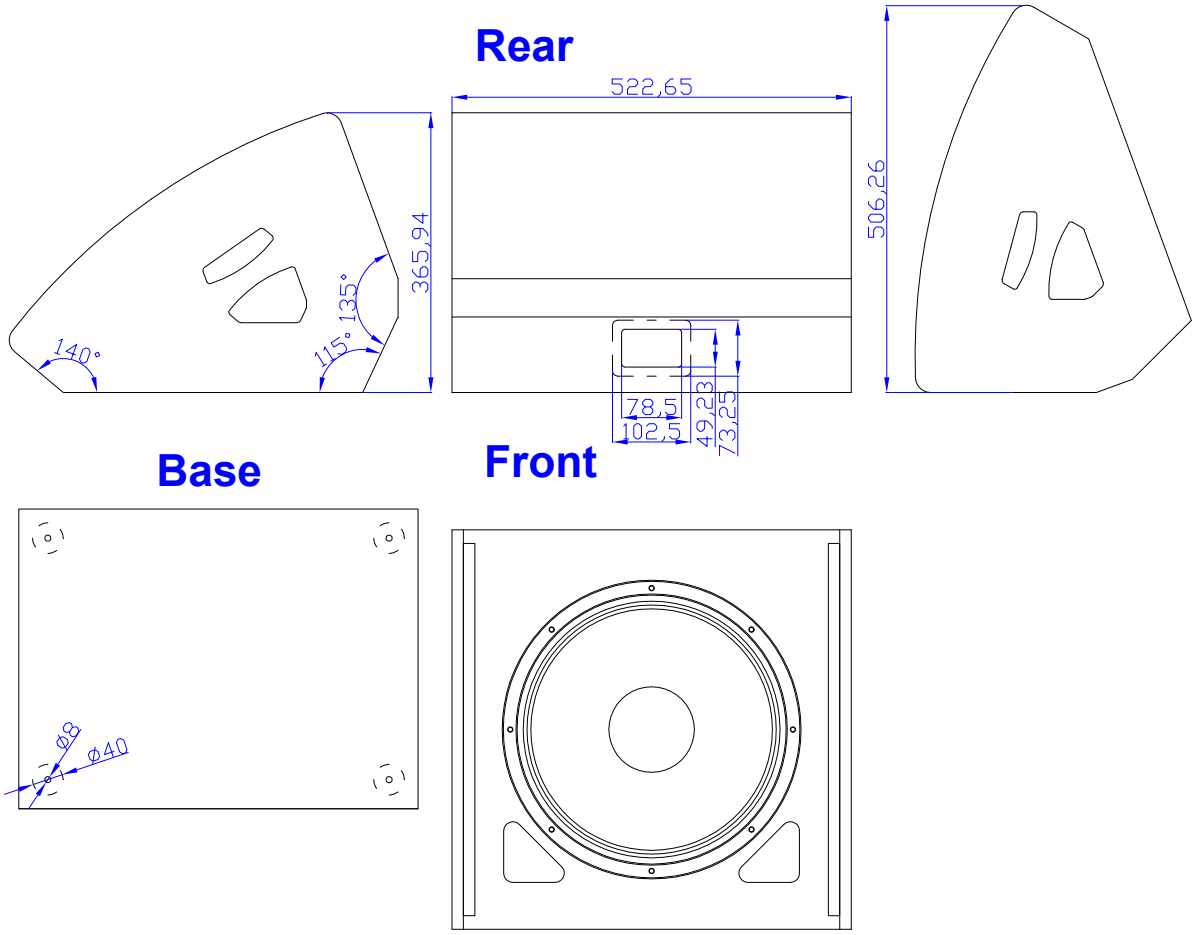

Lateral

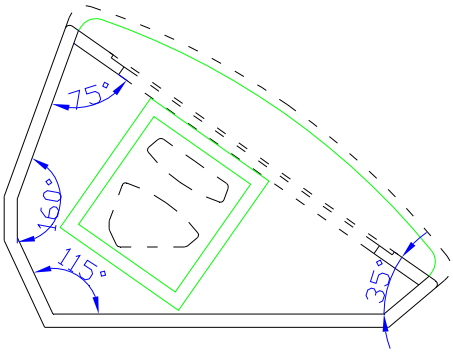

Front

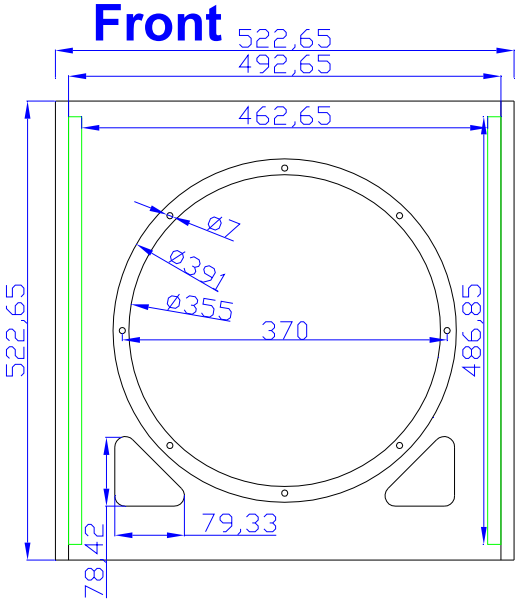

Lateral

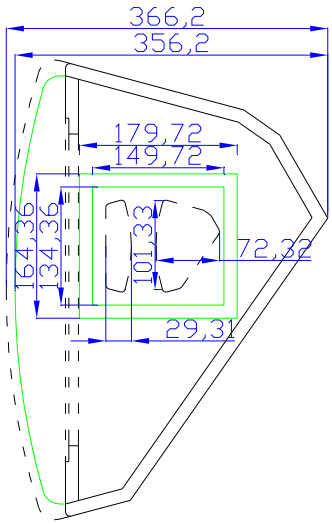

Rear

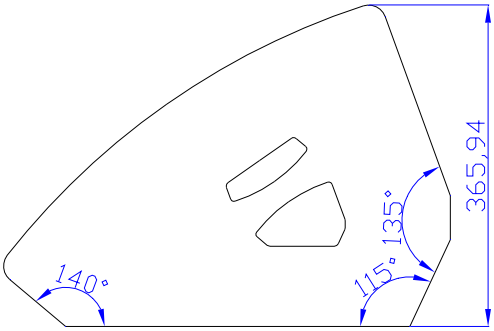

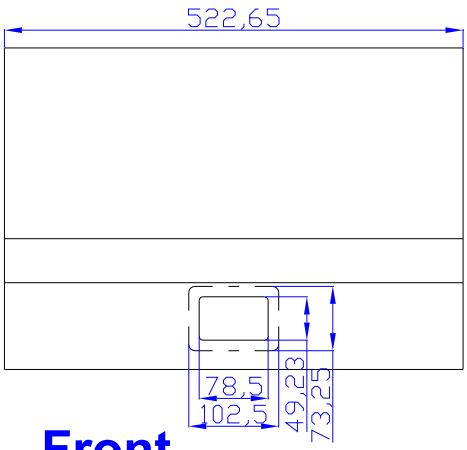

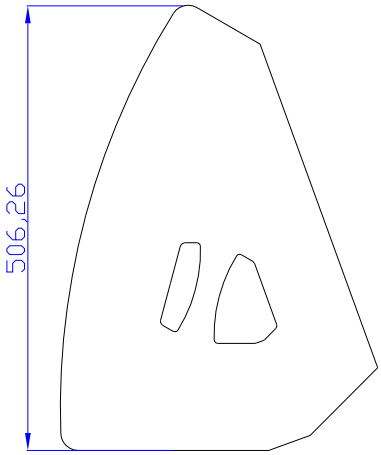

Base

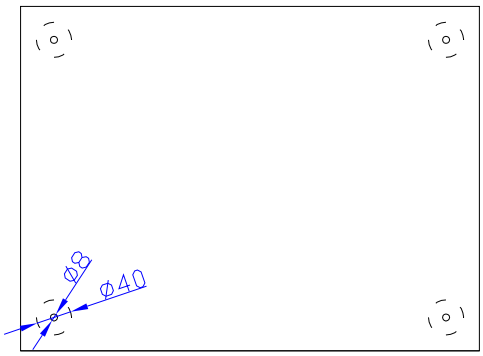

Front

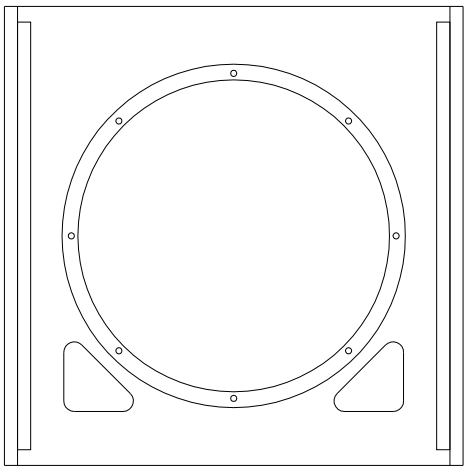

15KX

KEY FEATURES

- 15” bass loudspeaker and 2” exit compression driver combination
- Excelent power handling: 300 W AES (LF unit) - 100 W AES (HF unit)
- Titanium diaphragm compression driver
- Low weight thanks to the common magnet system for both units
- Coherent response
- Bass loudspeaker designed for compact bass reflex cabinets

TECHNICAL SPECIFICATIONS

LF Unit

• Nominal diameter	380 mm. 15 in.
• Rated impedance	8 ohms
• Minimum impedance	7.3 ohms
• Power capacity*	300 w AES
• Program power	600 w
• Sensitivity	99 dB 2.83v @ 1m @ 2π
• Frequency range	25 - 3000 Hz
• Voice coil diameter	77 mm. 3 in.
• Magnetic assembly weight	6.4 kg. 14.11 lb.
• BL factor	14.5 N / A
• Voice coil length	13 mm
• Air gap height	8 mm
• X damage (peak to peak)	28 mm

HF Unit

• Throat diameter	50.8 mm. 2 in
• Rated impedance	8 ohms
• Power capacity*	100 w AES
• Program power	200 w above 1 kHz
• Sensitivity**	105 dB 1w @ 1m
• Frequency range	800– 17000 Hz
• Voice coil diameter	72.2 mm. 2.87 in.
• Dispersion	90º conical

Notes:
*The power capacity is determined according to AES2-1984 (r2003) standard.
Program power is defined as the transducer's ability to handle normal music program material.

DIMENSION DRAWINGS

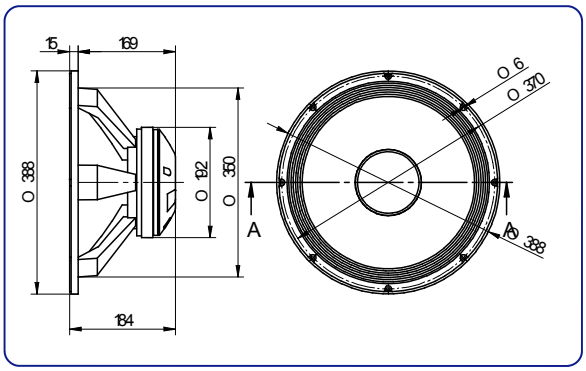

SM15/2 Presets

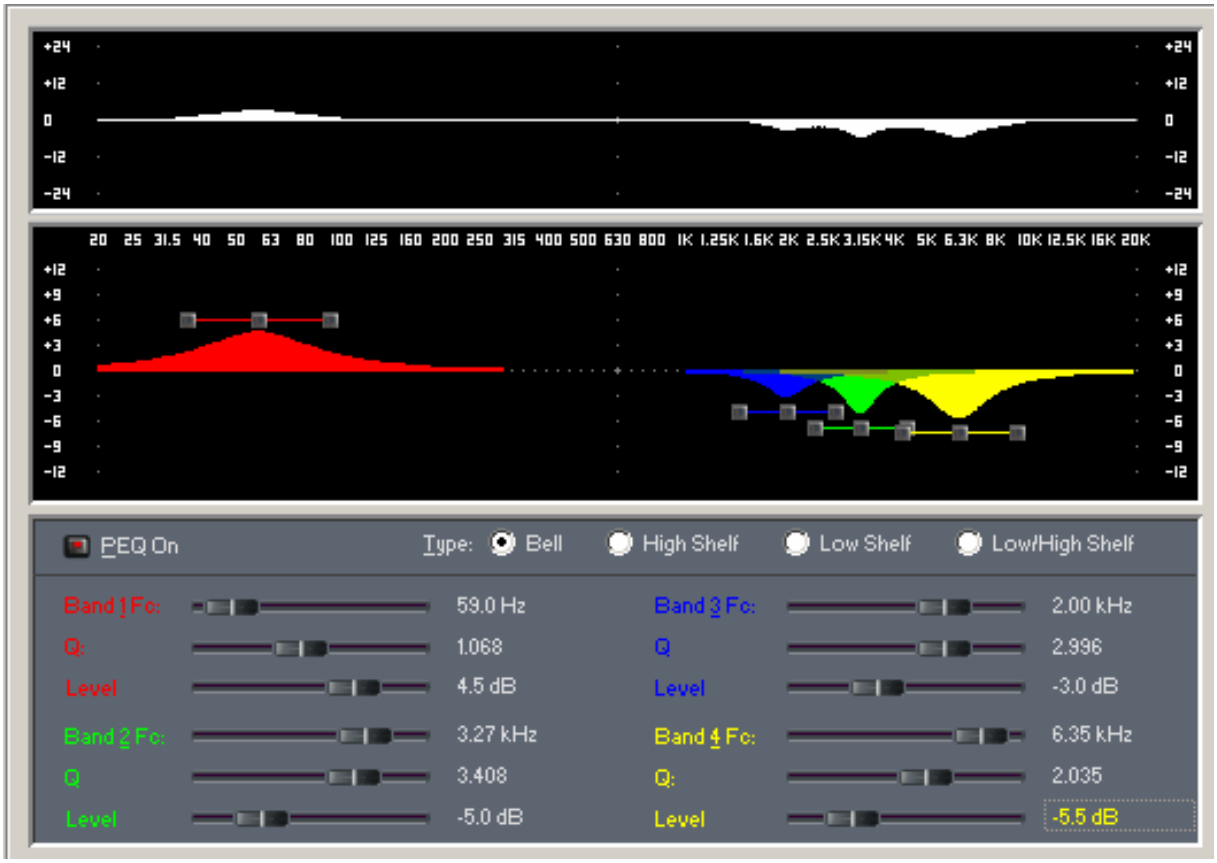
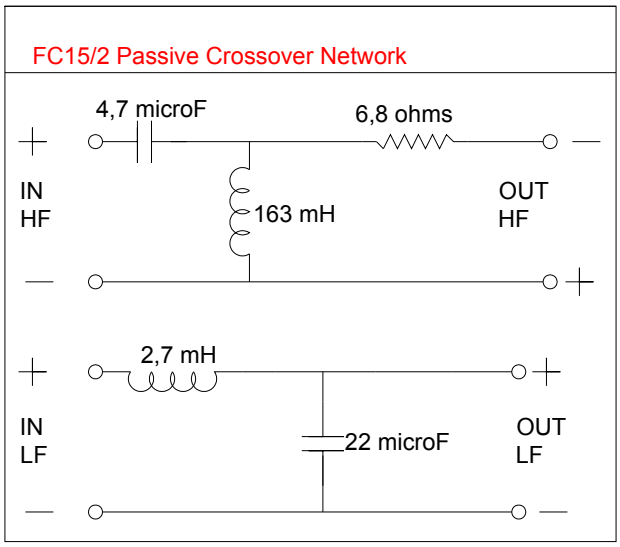
SM15/2 Crossover